ITEM NO.	QTY.	PART NO.	DESCRIPTION
1	1	1564	G2 54–F11 TP FLIPPER w/4" TAPER

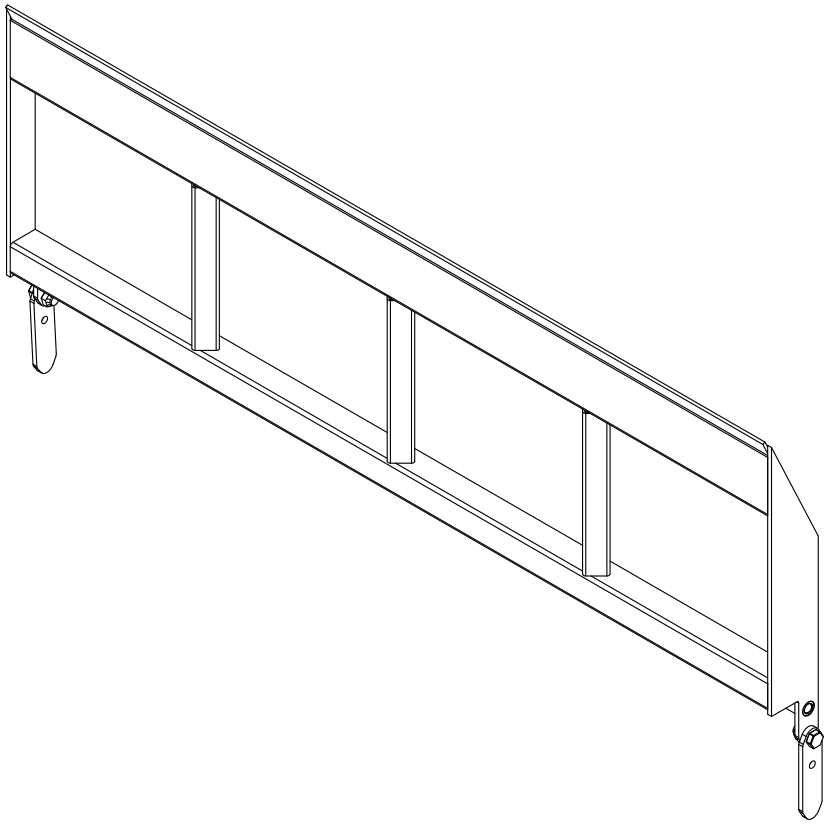

REV.	DATE	CHANGE RECORD	BY	APPVD	ECN
A	3/27/06	DRAWN IN AUTOCAD	MTC	KGJ	

THIRD ANGLE PROJECTION

DECIMAL	2PLC	3PLC
MACHINE SAW,DRILL	.030	.015
SHEAR, PUNCH FORM	.060	.030
TORCH, WELDING ROUGH CAST	.090	.060

DRAFT 2° | ANGULAR ±1°

FILENAME:

SYMBOLOGY PER ANSI Y14.5

DRAWN BY. MTC

DRAWN/DATE 02/27/06

APPVD/DATE 03/27/06

NOTES:

WOODBINE MFG. CO.
BUS BROWN DRIVE
WOODBINE, IOWA 51579
712–647–2050

The original TOMMY GATE® hydraulic lift

THE INFORMATION HERE IS CONFIDENTIAL AND MUST NOT BE USED IN ANYWAY DETRIMENTAL TO THE INTEREST OF WOODBINE MFG.

TITLE G2 54–F11+4 REPLACEMENT TP FLIPPER

SALES CATEGORY	PRODUCT LINE	SCALE	FIN. WT.	PART NO.
45	8950	N	57.9	960