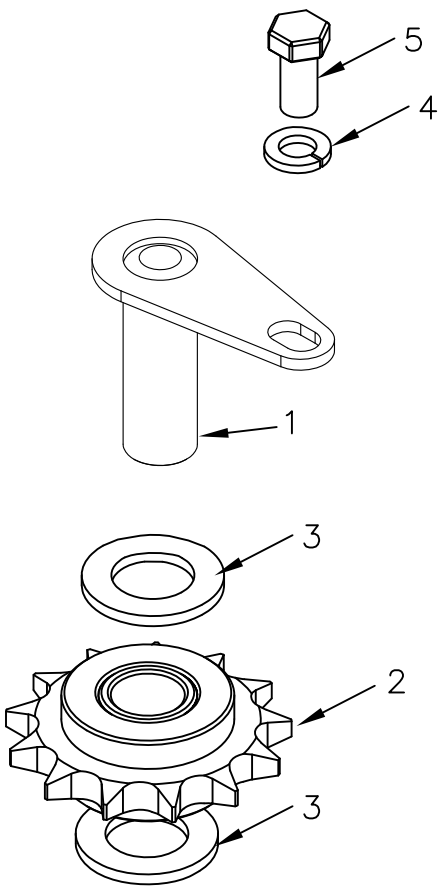

ITEM NO.	QTY.	PART NO.	DESCRIPTION
1	1	002295	SPROCKET PIN WELDMENT
2	1	007650	#50C13-1" SPROCKET WITH BUSHING
3	2	000622	3/4"IDx1-1/4"OD FLATWASHER(650)*ZP*
4	1	000572	3/8" SPRING LOCK WASHER
5	1	000507	3/8-16x1/2"HHCS GR5
6	1	095116	RAIL 13-TOOTH SPROCKET REPLACEMENT INSTRUCTIONS (16/20)

REV.	DATE	CHANGE RECORD	BY	APPVD	ECN
B	6/10/13	ADDED 95116	JCB		924
A	10/9/07	DRAWN IN AUTOCAD	JCB	KGJ	

THIRD ANGLE PROJECTION

DECIMAL	2PLC	3PLC
MACHINE SAW,DRILL	.030	.015
SHEAR, PUNCH FORM	.060	.030
TORCH, WELDING ROUGH CAST	.090	.060
DRAFT 2°	ANGULAR ±1°	

FILENAME:

SYMBOLOGY PER ANSI Y14.5

DRAWN BY. JCB

DRAWN/DATE 10/9/07

APPVD/DATE

NOTES:

WOODBINE MFG. CO.
BUS BROWN DRIVE
WOODBINE, IOWA 51579
712-647-2050

The original TOMMY GATE® hydraulic lift

THE INFORMATION HERE IS CONFIDENTIAL AND MUST NOT BE USED IN ANYWAY DETRIMENTAL TO THE INTEREST OF WOODBINE MFG.

TITLE 13 TOOTH REPAIR SPROCKET (N)

SALES CATEGORY	PRODUCT LINE	SCALE	FIN. WT.	PART NO.
		1:2		4149