ITEM NO.	QTY.	PART NO.	DESCRIPTION
1	1	013213	MONARCH SOLENOID 4-POST-FLAT BASE(TX)

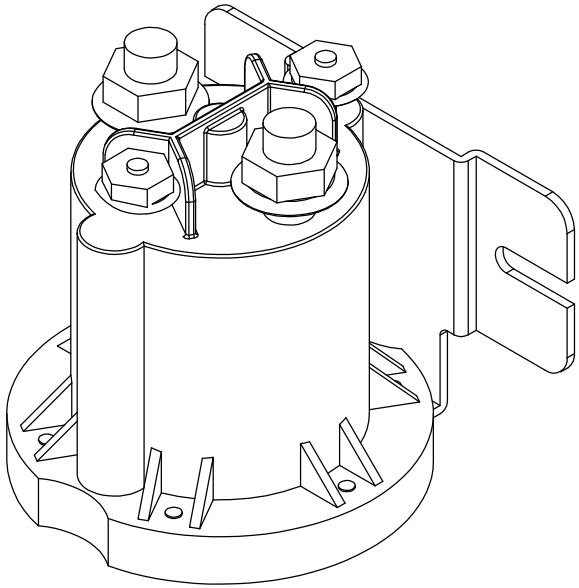

REV.	DATE	CHANGE RECORD	BY	APPVD	ECN
A	2/19/14	RELEASED TO PRODUCTION	GDB		1044

THIRD ANGLE PROJECTION

DECIMAL	2PLC	3PLC
MACHINE SAW,DRILL	.030	.015
SHEAR, PUNCH FORM	.060	.030
TORCH, WELDING ROUGH CAST	.090	.060

DRAFT 2° | ANGULAR ±1°

SYMBOLOGY PER ANSI Y14.5

DRAWN BY. GDB

DRAWN/DATE 2/19/14

APPVD/DATE

SALES CATEGORY

NOTES:

WOODBINE MFG. CO.
BUS BROWN DRIVE
WOODBINE, IOWA 51579
712-647-2050

The original TOMMY GATE hydraulic lift

THE INFORMATION HERE IS CONFIDENTIAL AND MUST NOT BE USED IN ANYWAY DETRIMENTAL TO THE INTEREST OF WOODBINE MFG.

TITLE REPLACEMENT RAISE SOLENOID-4 POST

PRODUCT LINE	SCALE	FIN. WT.	PART NO.
	N	1.5	013558