ITEM NO.	QTY.	PART NO.	DESCRIPTION
1	1	014477	BOTTLE RACK FENCE–LEFT
2	6	000622	3/4"IDx1–1/4"OD FLAT WASHER (650) *ZP*
3	2	002025	3/4" EXTERNAL SNAP RING(G2)PLATED
4	2	014659	.75"DIAx2.59" PIN W/FLAT HEAD KEEPER
5	2	000509	3/8–16x1" HHCS GR5
6	2	000550	3/8–16 GR5 HEX NUT
7	2	000553	3/8–16 LARGE FLNG LOCK NUT
8	1	014970	7GA.x2.76"x3"HIGH CYCLE GBR FENCE STOP BRACKET
9	1	014697	CHAIN–7MMx8 LINKS–ZINC GBR FENCE CHAIN
10	1	004747	GAS BOTTLE RACK HANG–2 LYNCH PIN
11	2	000756	1/4–20x3/4" PHI FH TYPE F SS
12	1	014215	3/16"x1–1/2" COTTER PIN
13	2	000508	3/8–16x3/4" HHCS GR5

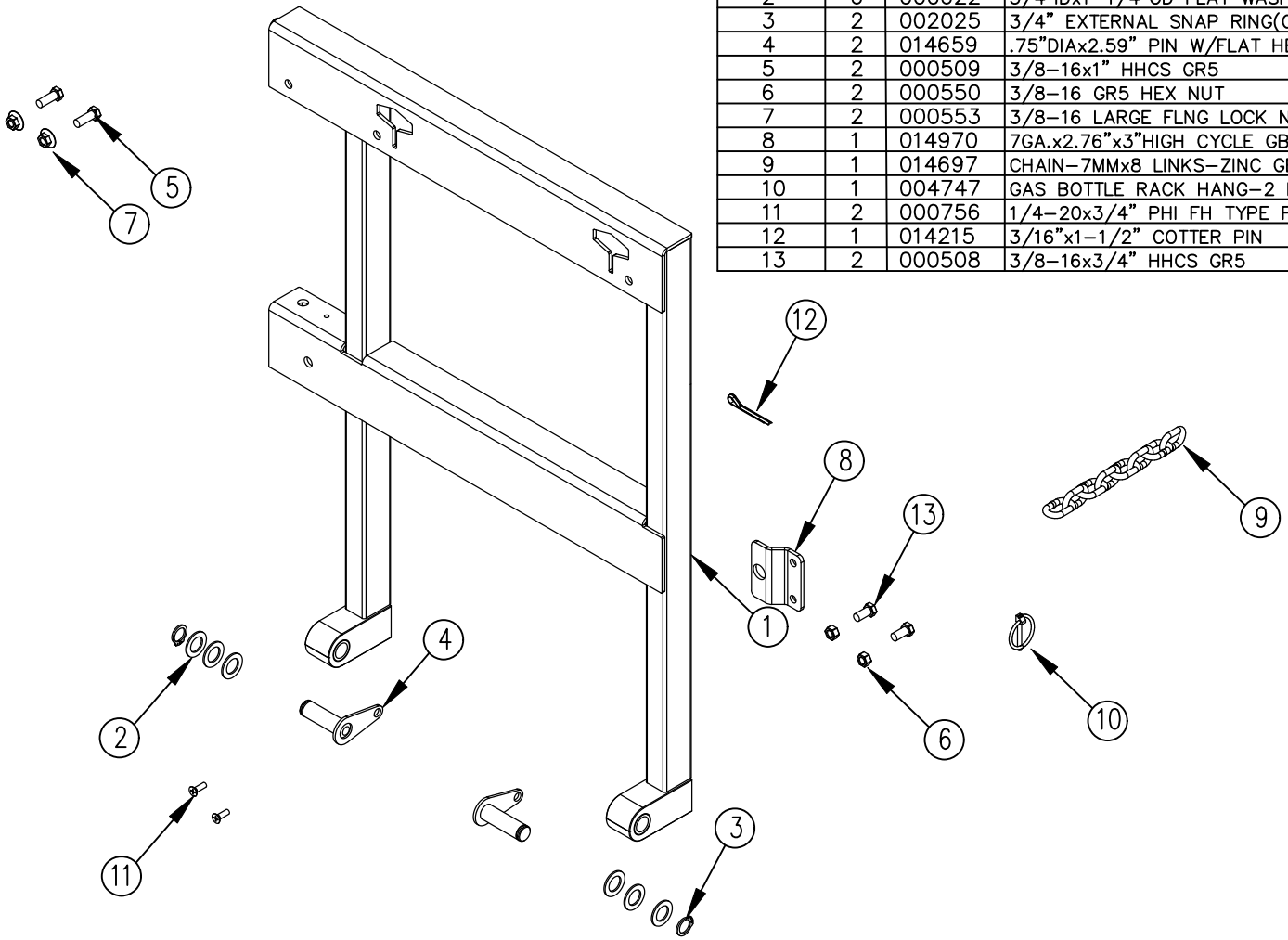

REV.	DATE	CHANGE RECORD	BY	APPVD	ECN
B	6/18/24	(2) 508 WERE (2) 509	MK		3011
A	3/29/16	RELEASED TO PRODUCTION	AAS		1606

THIRD ANGLE PROJECTION

UNLESS OTHERWISE SPECIFIED

DIMENSIONS ARE IN INCHES
TOLERANCES:
FRACTIONAL ±1/16
ANGULAR MACH ±1°
BEND ±1°
TWO PLACE DECIMAL ±0.030
THREE PLACE DECIMAL ±0.010

DRAWN BY AAS

DRAWN/DATE 3/29/16

APPVD/DATE —

DO NOT SCALE DRAWING

NOTES:

WOODBINE MFG. CO.
BUS BROWN DRIVE
WOODBINE, IOWA 51579

TITLE
REPLACEMENT BOTTLE RACK
FENCE–L HIGHCYCLE

THE INFORMATION HERE IS CONFIDENTIAL AND MUST NOT BE USED IN ANY WAY DETRIMENTAL TO THE INTEREST OF WOODBINE MFG.

SCALE 1:8 | WEIGHT – | PART NO. 14714