ITEM NO.	QTY.	PART NO.	DESCRIPTION
1	1	7543	7/8"DIA.x1-1/2" ARM PIN

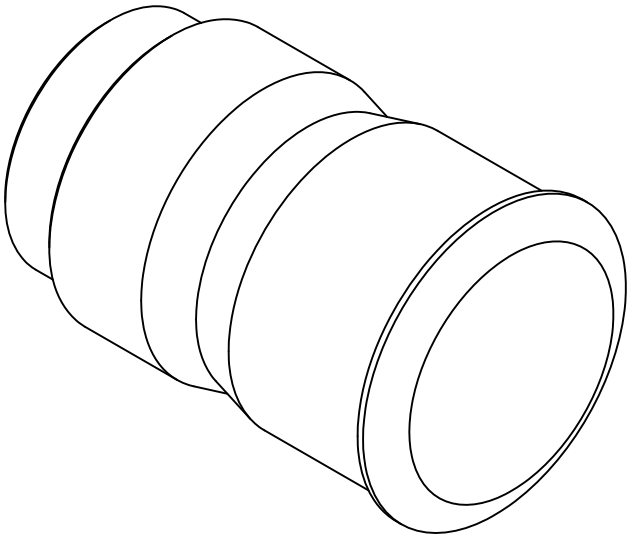

NOTE: AFTER SERIAL #M-82340 FOR 1000 & 1300 LB CAPACITY
AFTER SERIAL #M16-13065 FOR 1600 LB CAPACITY

REV.	DATE	CHANGE RECORD	BY	APPVD	ECN
A	3/27/08	DRAWN IN AUTOCAD	DJR	KDJ	

THIRD ANGLE PROJECTION

DECIMAL	2PLC	3PLC
MACHINE SAW,DRILL	.030	.015
SHEAR, PUNCH FORM	.060	.030
TORCH, WELDING ROUGH CAST	.090	.060

DRAFT 2° | ANGULAR ±1°

FILENAME:

SYMBOLOGY PER ANSI Y14.5

DRAWN BY. DJR

DRAWN/DATE 6/16/04

APPVD/DATE 3/27/06

NOTES:

WOODBINE MFG. CO.
BUS BROWN DRIVE
WOODBINE, IOWA 51579
712-647-2050
The original TOMMY GATE® hydraulic lift

THE INFORMATION HERE IS CONFIDENTIAL AND MUST NOT BE USED IN ANYWAY DETRIMENTAL TO THE INTEREST OF WOODBINE MFG.

TITLE REPLACEMENT 7/8" X 1-1/2" ARM PIN

SALES CATEGORY	PRODUCT LINE	SCALE	FIN. WT.	PART NO.
45	8950	N	0.2	952