ITEM NO.	QTY.	PART NO.	DESCRIPTION
1	1	006416	CANTILEVER LIFT ARM ASSEMBLY COMPLETE
2	1	003114	CANTILEVER CYLINDER ROD PIN W/ KEEPER
3	3	011084	1/4-20x1" FLAT HEAD SOCKET CAP SCREW ZP
4	1	002026	7/8" EXTERNAL SNAP RING, PLATED
5	3	011081	1/4-20 KEPS NUT ZINC
6	2	003055	CANTILEVER LIFT ARM PIN W/ KEEPER
7	2	010316	1.250" EXTERNAL SNAP RING ZP

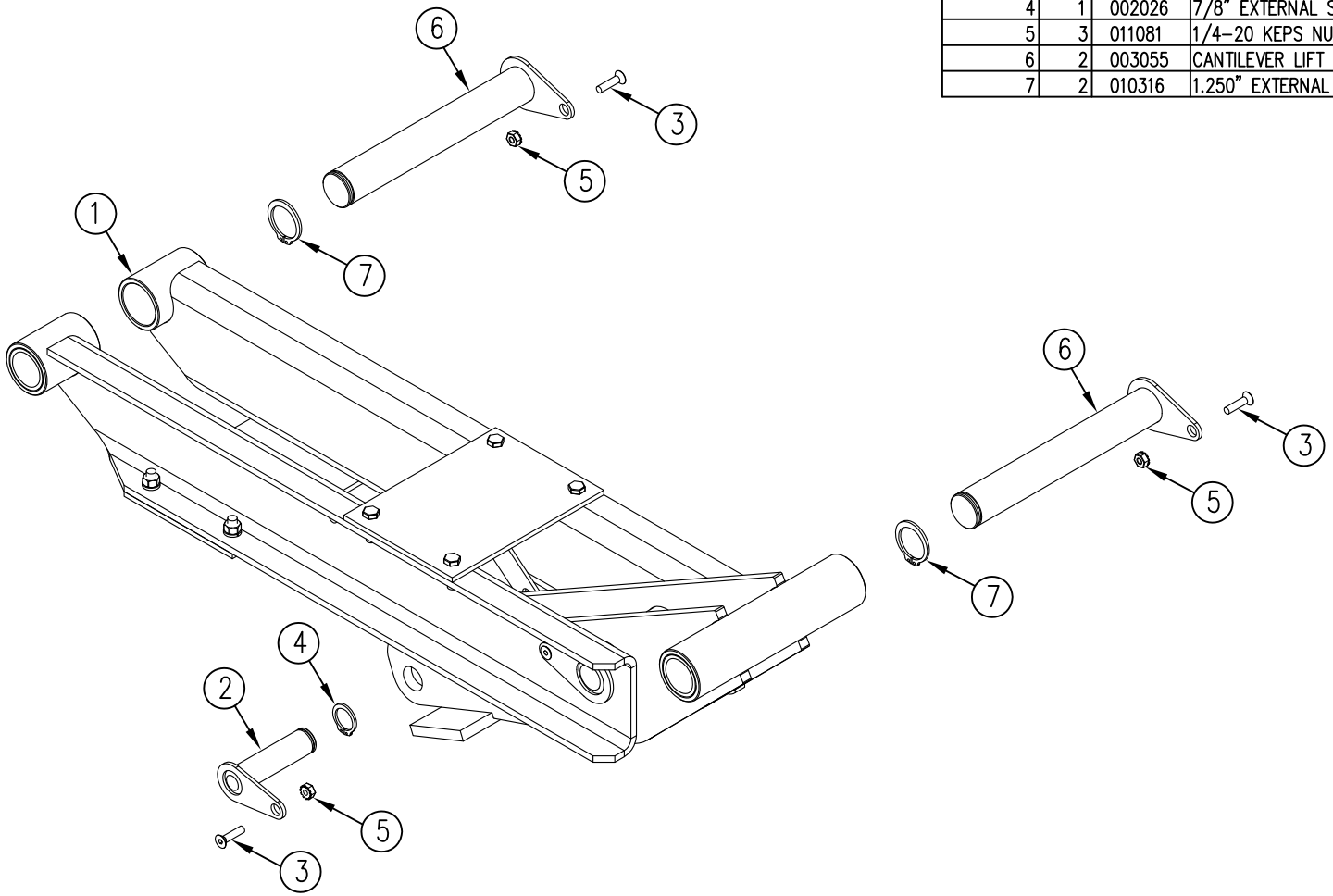

REV.	DATE	CHANGE RECORD	BY	APPVD	ECN
A	6/28/11	RELEASED TO PRODUCTION	JCB		450

THIRD ANGLE PROJECTION

DECIMAL	2PLC	3PLC
MACHINE SAW,DRILL	.030	.015
SHEAR, PUNCH FORM	.060	.030
TORCH, WELDING ROUGH CAST	.090	.060

DRAFT 2° | ANGULAR ±1°

FILENAME:

SYMBOLOGY PER ANSI Y14.5

DRAWN BY. JCB

DRAWN/DATE 6/28/11

APPVD/DATE

NOTES:

WOODBINE MFG. CO.
BUS BROWN DRIVE
WOODBINE, IOWA 51579
712-647-2050

The original TOMMY GATE hydraulic lift

THE INFORMATION HERE IS CONFIDENTIAL AND MUST NOT BE USED IN ANYWAY DETRIMENTAL TO THE INTEREST OF WOODBINE MFG.

TITLE CANTILEVER REPL. LIFT ARM W/ PINS & KEEPERS

SALES CATEGORY | PRODUCT LINE | SCALE 1:6 | FIN. WT. | PART NO. 11263