ITEM NO.	QTY.	PART NO.	DESCRIPTION
1	1	004080	3" PUL.SGL(7/32)W/.75"I.D.BUSH
2	1	004165	REPAIR HARDWARE ONLY - 3/4" PULLEY

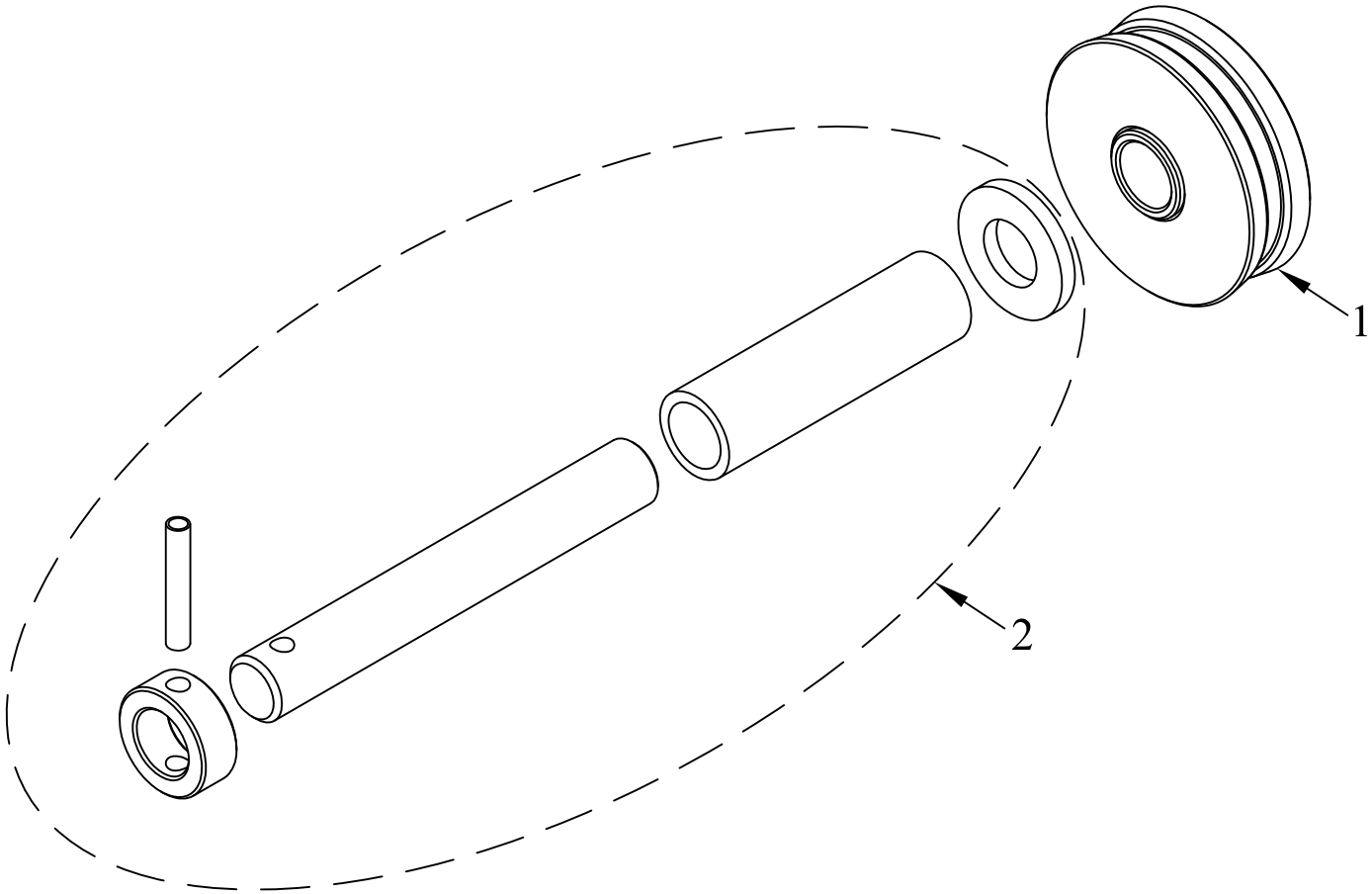

REV.	DATE	CHANGE RECORD	BY	APPVD	ECN
B	2/4/10	COMBINED PARTS INTO 4165 KIT	JCB		263

THIRD ANGLE PROJECTION

DECIMAL	2PLC	3PLC
MACHINE SAW,DRILL	.030	.015
SHEAR, PUNCH FORM	.060	.030
TORCH, WELDING ROUGH CAST	.090	.060
DRAFT 2°	ANGULAR ±1°	

FILENAME:

SYMBOLOGY PER ANSI Y14.5

DRAWN BY. DJR

DRAWN/DATE 12/11/03

APPVD/DATE

NOTES:

WOODBINE MFG. CO.
BUS BROWN DRIVE
WOODBINE, IOWA 51579
712-647-2050
The original TOMMY GATE® hydraulic lift

THE INFORMATION HERE IS CONFIDENTIAL AND MUST NOT BE USED IN ANYWAY DETRIMENTAL TO THE INTEREST OF WOODBINE MFG.

TITLE 3"SINGLE(7/32")GROOVE REPL PULLEY KIT w/3/4"PIN

SALES CATEGORY	PRODUCT LINE	SCALE	FIN. WT.	PART NO.
		N	2.60	4176