ITEM NO.	QTY.	PART NO.	DESCRIPTION
1	1	006417	CANTILEVER TENSION ARM PIN W/ KEEPER
2	1	002025	3/4"EXTERNAL SNAP RING, PLATED
3	1	011080	1/4-20x3/4" FLAT HEAD SOCKET CAP SCREW ZP
4	1	011081	1/4-20 KEPS NUT ZINC

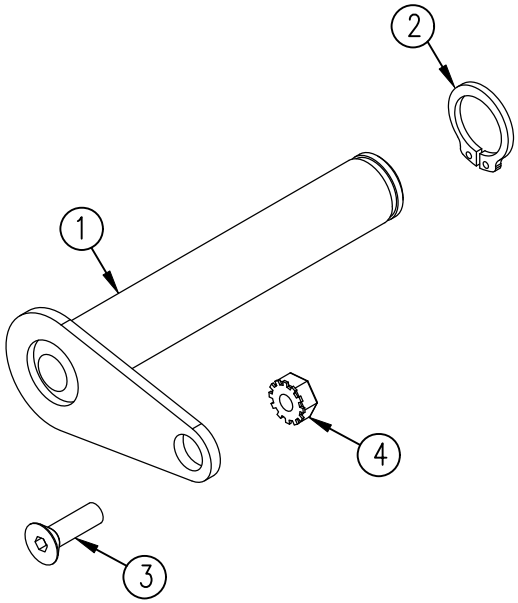

REV.	DATE	CHANGE RECORD	BY	APPVD	ECN
B	1/15/24	011080 WAS 011084, UPDATED TITLE BLOCK	MK		2955
A	6/29/11	RELEASED TO PRODUCTION	JCB		450

THIRD ANGLE PROJECTION

UNLESS OTHERWISE SPECIFIED

DIMENSIONS ARE IN INCHES
TOLERANCES:
FRACTIONAL ±1/16
ANGULAR MACH ±1°
BEND ±1°
TWO PLACE DECIMAL ±0.030
THREE PLACE DECIMAL ±0.010

DRAWN BY JCB

DRAWN/DATE 6/29/11

APPVD/DATE —

DO NOT SCALE DRAWING

NOTES:

WOODBINE MFG. CO.
BUS BROWN DRIVE
WOODBINE, IOWA 51579

TITLE
3/4" REPLACEMENT
CANTILEVER TENSION ARM PIN

THE INFORMATION HERE IS CONFIDENTIAL AND MUST NOT BE USED IN ANY WAY DETRIMENTAL TO THE INTEREST OF WOODBINE MFG.

SCALE 1:2 | WEIGHT — | PART NO. 11268