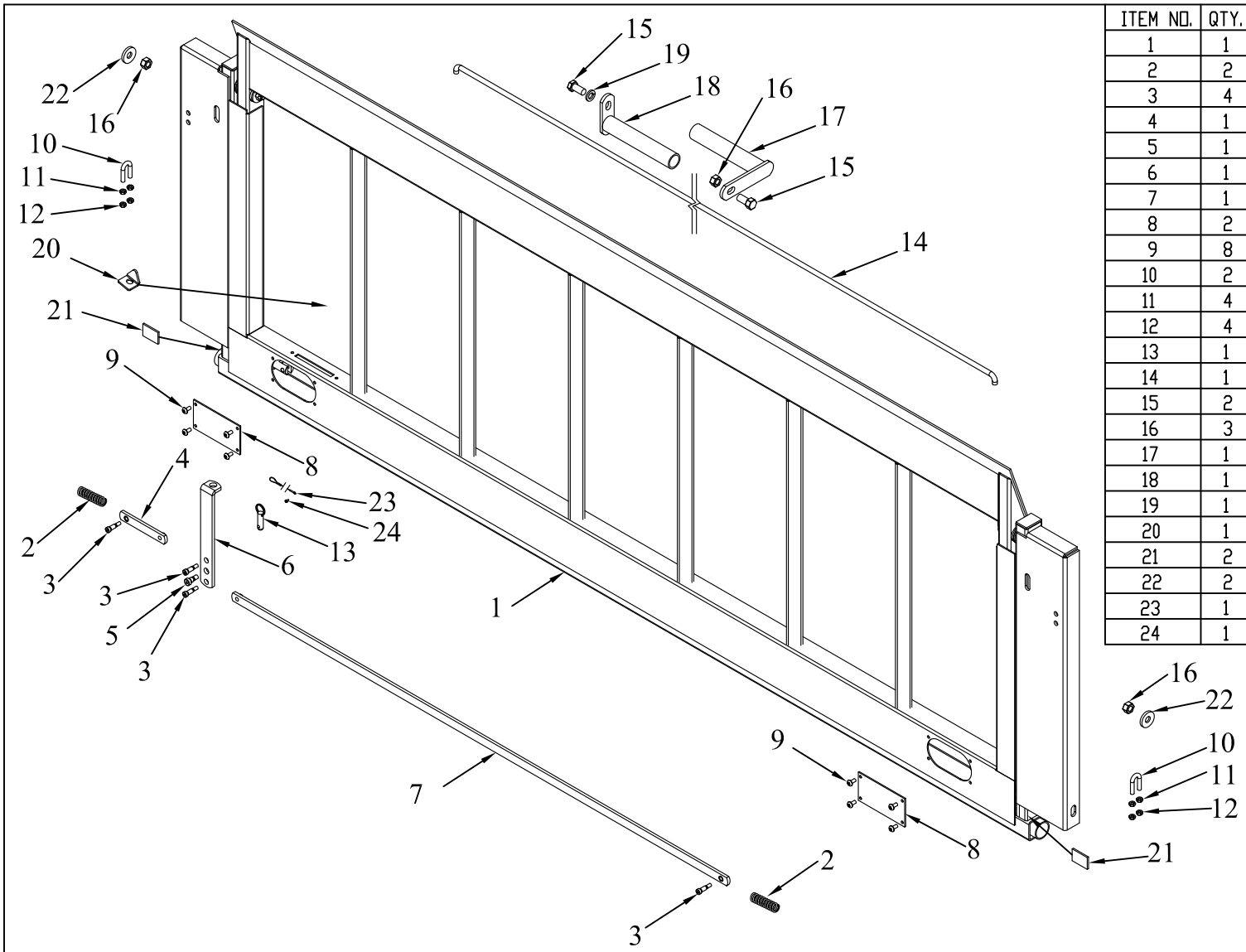

ITEM NO.	QTY.	PART NO.	DESCRIPTION
1	1	002083	LND PLATFORM COMPLETE(72)
2	2	006043	LND INSERT LATCH SPRING-2.50" LENGTH
3	4	000990	1/4-20 LINKAGE SHOULDER BOLT(LND)
4	1	006974	INSERT LINK SHORT COMPLETE(LND)
5	1	000991	5/16-18 INSERT LATCH PIVOT BOLT-LND
6	1	006831	INSERT HANDLE COMPLETE
7	1	006978	INSERT LINK LONG COMPLETE(72LND)
8	2	006059	12GA.x2.63"x5"ACCESS COVER(LND)
9	8	000620	1/4-20x1/2" PN HD TY F S(G2)
10	2	004727	3/8" U-BOLT(SHORT)x16x7/8x1-1/2
11	4	000550	3/8-16 GR5 HEX NUT
12	4	000605	3/8-16 USS CROWN LOCK NUT
13	1	007737	1/2"DIA.x1"COTTERLESS HITCH PIN
14	1	007871	0.375 X 70.563 SPRING (72 EA)
15	2	000587	1/2-13x1" HHCS GR5
16	3	000588	1/2-13 CROWN LOCK NUT
17	1	007431	PASS SIDE SPRING HOLDER (62 DEG)
18	1	007778	DRIVERS SIDE SPRING HOLDER
19	1	000573	1/2" SPRING LOCK WASHER
20	1	002388	INSERT LATCH DEADMAN (LND)
21	2	002371	10GA.x1.13"x1.63"TUBE CAP(BR)
22	2	000576	1/2" USS FLAT WASHER
23	1	004538	LANYARD FOR NEW LND-STAINLESS
24	1	000540	10-32X3/8" PH THRD CUTTER

REV.	DATE	CHANGE RECORD	BY	APPVD	ECN
D	4/30/12	ADDED (1) 4538 & (1) 540	JCB		654
C	10/27/10	REPLACED (2) 567 WITH (2) 576; REMOVED (1) 604; ADDED (1) 587	JCB		359
B	12/16/09	REPLACED KITS WITH INDIVIDUAL PARTS; ADDED (1) 2388, (2) 2371, (2) 576, (2) 588	JCB		245

THIRD ANGLE PROJECTION

DECIMAL	2PLC	3PLC
MACHINE SAW,DRILL	.030	.015
SHEAR, PUNCH FORM	.060	.030
TORCH, WELDING ROUGH CAST	.090	.060
DRAFT 2°	ANGULAR ±1°	

FILENAME:

SYMBOLOGY PER ANSI Y14.5

DRAWN BY. DJR

DRAWN/DATE 12/13/05

APPVD/DATE

NOTES:

WOODBINE MFG. CO.
BUS BROWN DRIVE
WOODBINE, IOWA 51579
712-647-2050
The original TOMMY GATE hydraulic lift

THE INFORMATION HERE IS CONFIDENTIAL AND MUST NOT BE USED IN ANYWAY DETRIMENTAL TO THE INTEREST OF WOODBINE MFG.

TITLE 72 LND REPLACEMENT PLATFORM

SALES CATEGORY	PRODUCT LINE	SCALE	FIN. WT.	PART NO.
		N		9488