ITEM NO.	QTY.	PART NO.	DESCRIPTION
1	1	018174	7GA.x3.75"x10.50"PLATFORM STOP ANGLE-PS
2	2	001210	PLASTIC PLATFORM BUMPER STOP(RAIL)
3	2	015775	1/4-20x1-1/2" PH PAN HD MS
4	2	011081	1/4-20 KEPS NUT ZINC
5	4	000508	3/8-16x3/4" HHCS GR5
6	4	000572	3/8" SPRING LOCK WASHER
7	4	000550	3/8-16 GR5 HEX NUT
8	4	015616	PLATFORM STOP SPACER (V2)
9	1	018172	7GA.x3.75"x10.50"PLATFORM STOP ANGLE-DR

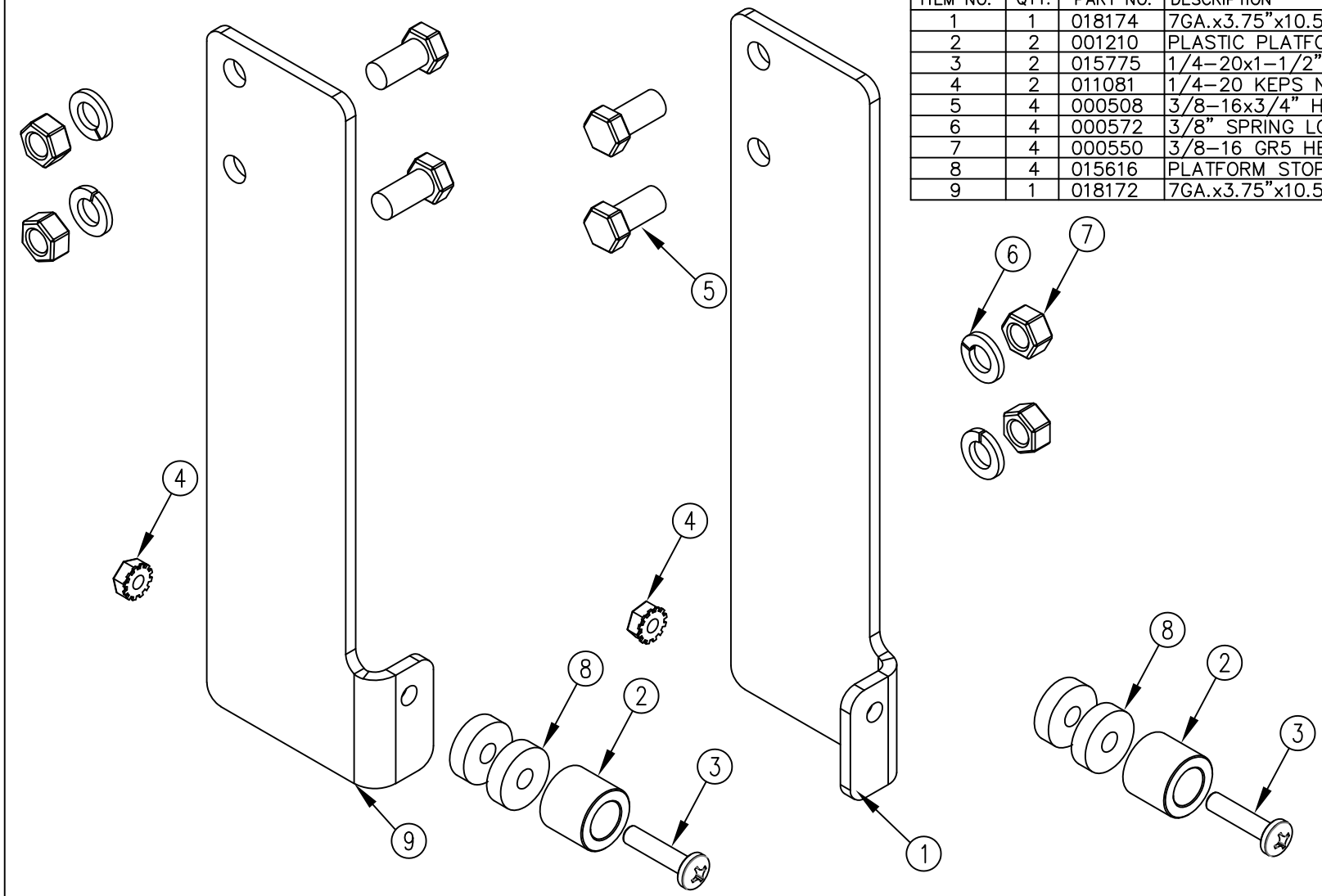

REV.	DATE	CHANGE RECORD	BY	APPVD	ECN
A	3/20/25	RELEASED TO PRODUCTION	AAS		3125

THIRD ANGLE PROJECTION

UNLESS OTHERWISE SPECIFIED

DIMENSIONS ARE IN INCHES
TOLERANCES:
FRACTIONAL ±1/16
ANGULAR MACH ±1°
BEND ±1°
TWO PLACE DECIMAL ±0.030
THREE PLACE DECIMAL ±0.010

DRAWN BY: AAS
DRAWN/DATE: 3/20/25
APPVD/DATE: —
DO NOT SCALE DRAWING

NOTES:

WOODBINE MFG. CO.
BUS BROWN DRIVE
WOODBINE, IOWA 51579

TITLE
REPLACEMENT V2-45 FA49
PLATFORM STOP KIT

THE INFORMATION HERE IS CONFIDENTIAL AND MUST NOT BE USED IN ANY WAY DETRIMENTAL TO THE INTEREST OF WOODBINE MFG.

SCALE 1:2 | WEIGHT – | PART NO. 018584