ITEM NO.	QTY.	PART NO.	DESCRIPTION
1	1	8774	CLOTH CHAIN COVER (33LINK)
2	2	9076	HOG RING

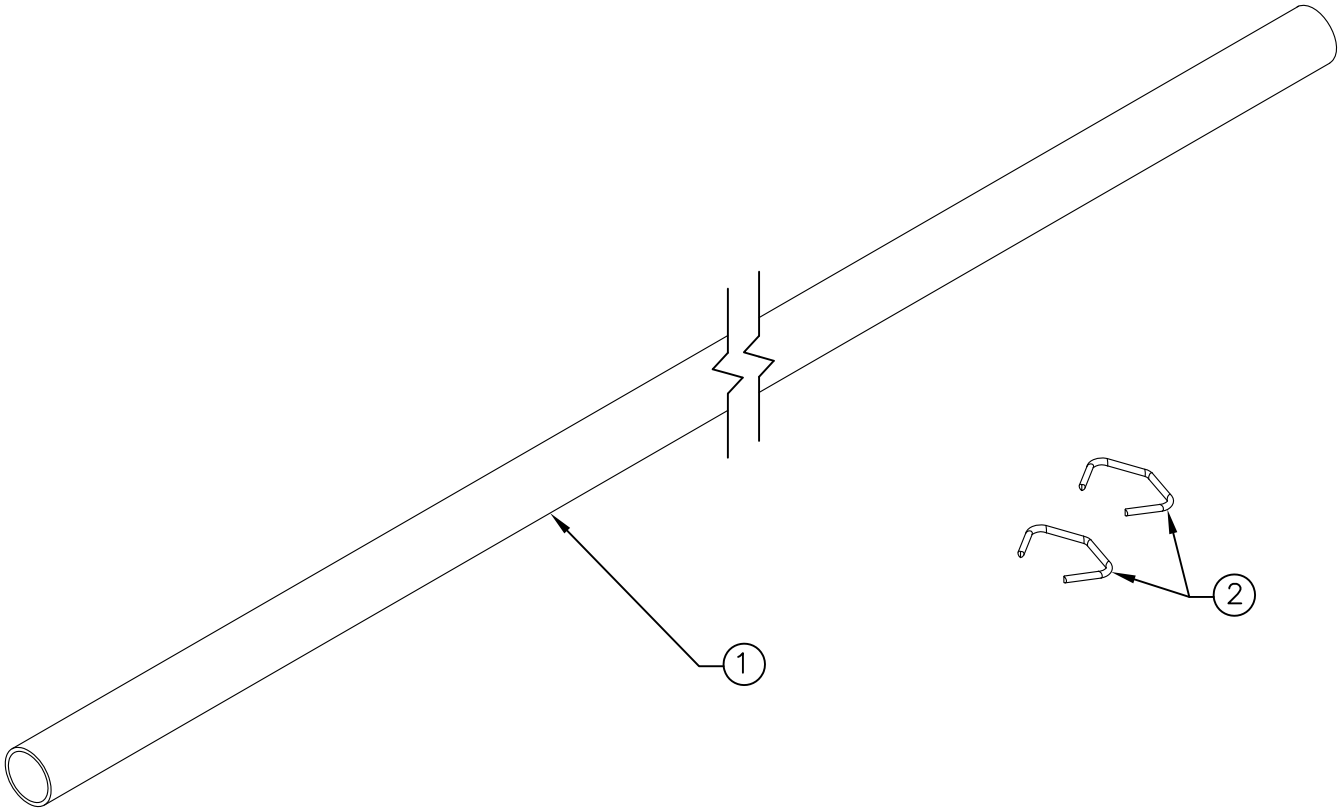

REV.	DATE	CHANGE RECORD	BY	APPVD	ECN
A	5/15/06	DRAWN IN AUTOCAD	JCB	KGJ	
B	5/9/08	REMOVED PN009077 AND ADDED PN009076	MTC	KGJ	

THIRD ANGLE PROJECTION

DECIMAL	2PLC	3PLC
MACHINE SAW,DRILL	.030	.015
SHEAR, PUNCH FORM	.060	.030
TORCH, WELDING ROUGH CAST	.090	.060

DRAFT 2° | ANGULAR ±1°

FILENAME: E:\KITS(Repair Parts)\Railgate\006596.dwg

SYMBOLOGY PER ANSI Y14.5

DRAWN BY. JCB

DRAWN/DATE 5/15/06

APPVD/DATE 5/8/08

NOTES:

WOODBINE MFG. CO.
BUS BROWN DRIVE
WOODBINE, IOWA 51579
712-647-2050
The original TOMMY GATE® hydraulic lift

THE INFORMATION HERE IS CONFIDENTIAL AND MUST NOT BE USED IN ANYWAY DETRIMENTAL TO THE INTEREST OF WOODBINE MFG.

TITLE REPAIR CLOTH CHAIN COVER (33LINK)

SALES CATEGORY	PRODUCT LINE	SCALE	FIN. WT.	PART NO.
45	1249	1:4	0.181	6596