ITEM NO.	QTY.	PART NO.	DESCRIPTION
1	1	012485	85 55+12 ALUMINUM SC PLATFORM COMPLETE(1P)
2	2	001936	SQ. TORSION SPRNG ARM (SC)
3	2	001910	.25"X1"X6.72" LINK
4	4	000510	3/8-16x1-1/4" HHCS GR5
5	4	000575	3/8 USS FLAT WASHER
6	4	001906	.377"I.D.X.503"O.D.X.281" BRONZE BUSHING
7	6	000553	3/8-16 LARGE FLANGE LOCK NUT
8	2	001914	0.115"WIREX0.75"X5.5" EX. SPRING
9	1	001974	0.75"SQ.X86.63" PIVOT BAR
10	4	000582	1-1/2" NARROW RIM MACHINE BUSHING
11	2	004720	1/4"x2" COTTER PIN
12	1	001920	.88"I.D.x1.12"O.D.x88" TUBE ASY (85)
13	2	005037	7/8" HEYCO PLUG
14	2	001902	1/2"DIA.x1-1/2" CHROME PLATED SHOULDER BOLT
15	1	007282	SELF CLOSE ARM (LEFT) (N)
16	1	007281	SELF CLOSE ARM (RIGHT) (N)

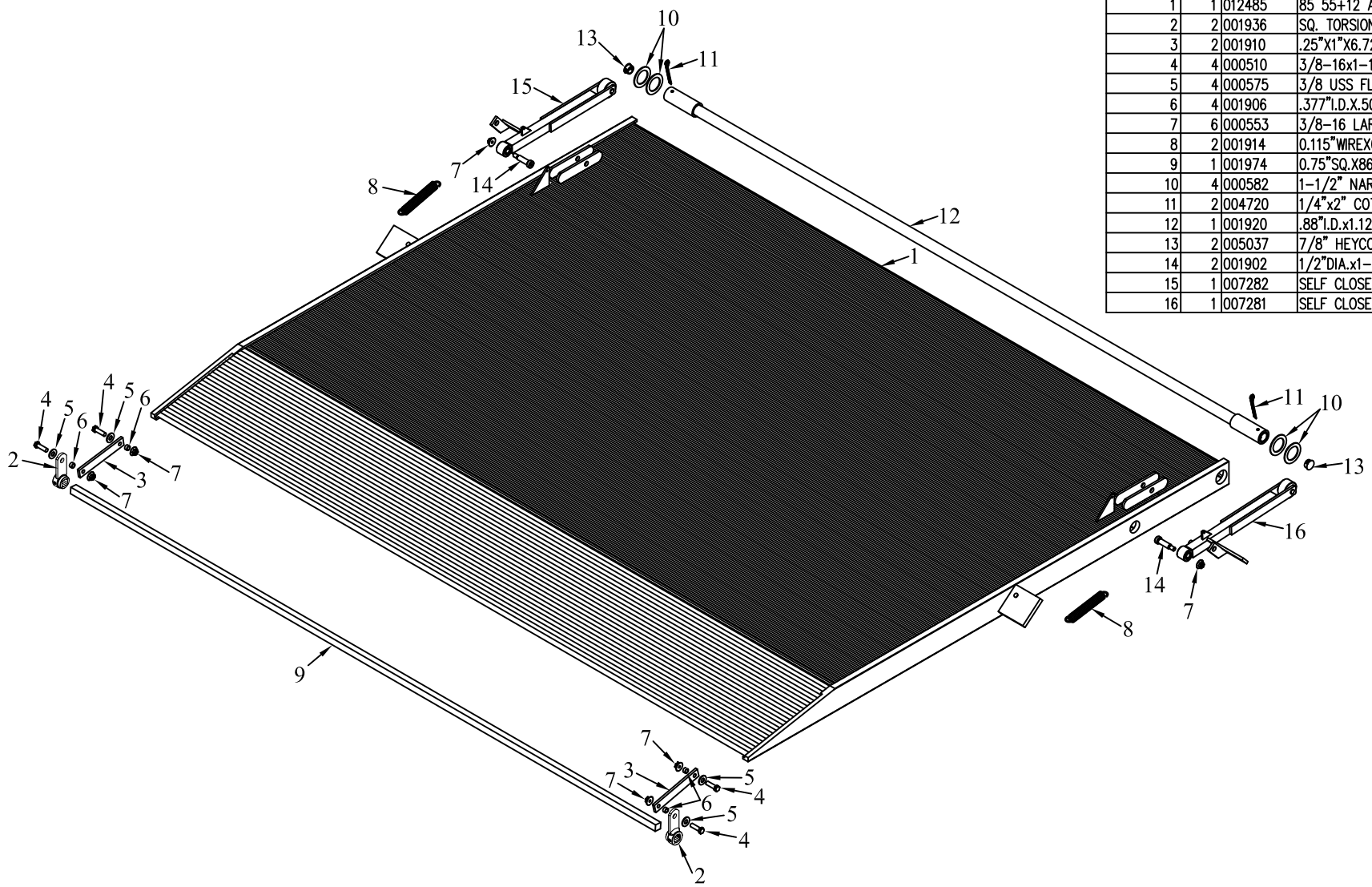

REV.	DATE	CHANGE RECORD	BY	APPVD	ECN
C	1/5/13	12485 WAS 9847	GDB		805
B	5/2/12	REMOVED (4) 007711	GDB		649
A	8/15/08	DRAWN IN AUTOCAD	JCB	KGJ	

THIRD ANGLE PROJECTION

DECIMAL	2PLC	3PLC
MACHINE SAW,DRILL	.030	.015
SHEAR, PUNCH FORM	.060	.030
TORCH, WELDING ROUGH CAST	.090	.060
DRAFT 2°	ANGULAR ±1°	

FILENAME:

SYMBOLOGY PER ANSI Y14.5

DRAWN BY. JCB

DRAWN/DATE 8/15/08

APPVD/DATE

NOTES:

WOODBINE MFG. CO.
BUS BROWN DRIVE
WOODBINE, IOWA 51579
712-647-2050
The original TOMMY GATE hydraulic lift

THE INFORMATION HERE IS CONFIDENTIAL AND MUST NOT BE USED IN ANYWAY DETRIMENTAL TO THE INTEREST OF WOODBINE MFG.

TITLE (85) SC 55+12" REPLACEMENT ALUMINUM PLATFORM

SALES CATEGORY	PRODUCT LINE	SCALE	FIN. WT.	PART NO.
		1:16		1720