ITEM NO.	QTY.	PART NO.	DESCRIPTION
1	1	004321	SOLENOID–3 POST

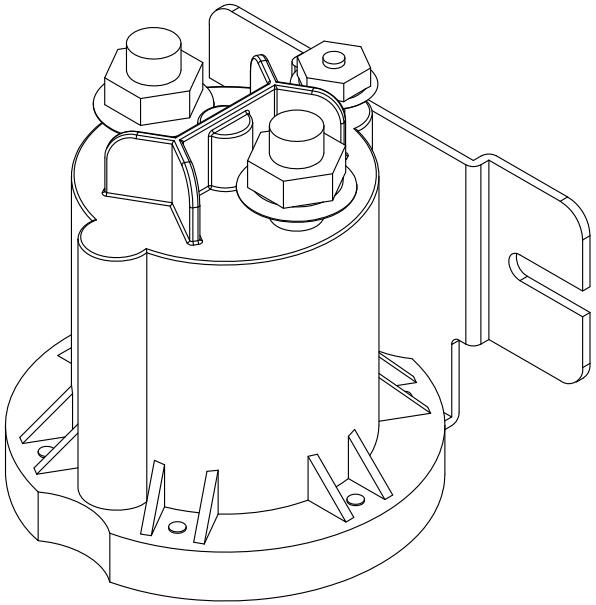

REV.	DATE	CHANGE RECORD	BY	APPVD	ECN
B	7/16/09	CHANGED GRAPHIC TO SHOW SOLENOID THAT IS NOW USED	MTC	MTC	

THIRD ANGLE PROJECTION

DECIMAL	2PLC	3PLC
MACHINE SAW,DRILL	.030	.015
SHEAR, PUNCH FORM	.060	.030
TORCH, WELDING ROUGH CAST	.090	.060

DRAFT 2° | ANGULAR ±1°

FILENAME: KITS(Repair Parts)\Railgate\000967

SYMBOLOGY PER ANSI Y14.5

DRAWN BY. DJR

DRAWN/DATE 7/30/03

APPVD/DATE 7/16/09

NOTES:

WOODBINE MFG. CO.
BUS BROWN DRIVE
WOODBINE, IOWA 51579
712–647–2050

The original TOMMY GATE® hydraulic lift

THE INFORMATION HERE IS CONFIDENTIAL AND MUST NOT BE USED IN ANYWAY DETRIMENTAL TO THE INTEREST OF WOODBINE MFG.

TITLE REPLACEMENT RAISE SOLENOID–3 POST

SALES CATEGORY	PRODUCT LINE	SCALE	FIN. WT.	PART NO.
45	8950	N	1.5	967