ITEM NO.	QTY.	PART NO.	DESCRIPTION
1	1	2050	G2 .75"DIA.x3.047" PIN w/KEEPER
2	1	2025	3/4" EXTERNAL SNAP RING(G2) PLATED
3	1	2109	G2 .75"IDIx1"ODx1.5" BEARING
4	1	756	1/4-20x3/4" PH FH TYP F SS

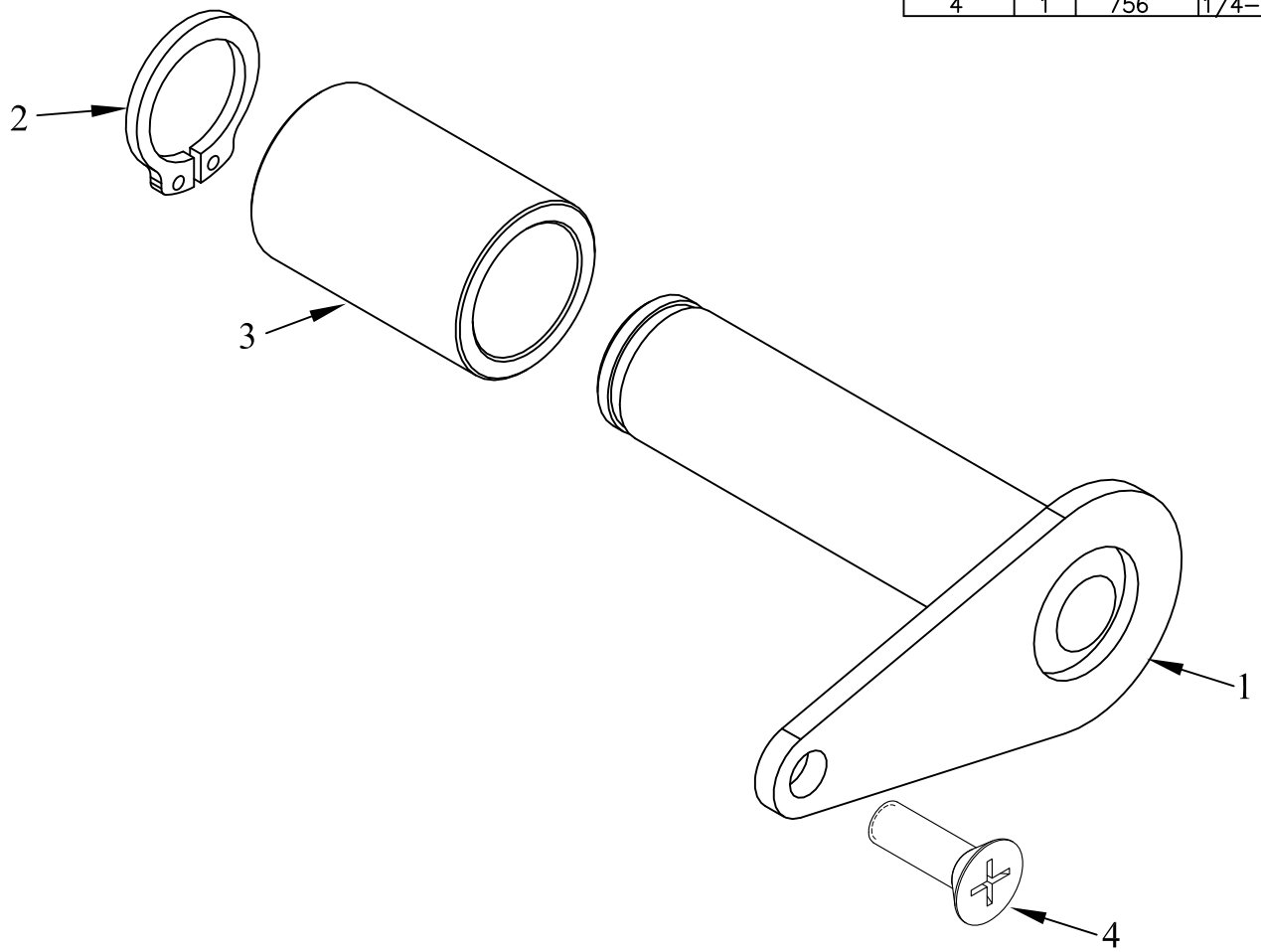

REV.	DATE	CHANGE RECORD	BY	APPVD	ECN
B	4/1/09	REPLACED PN620 WITH PN 756	LSB	LSB	

THIRD ANGLE PROJECTION

DECIMAL	2PLC	3PLC
MACHINE SAW,DRILL	.030	.015
SHEAR, PUNCH FORM	.060	.030
TORCH, WELDING ROUGH CAST	.090	.060
DRAFT 2°	ANGULAR ±1°	

FILENAME:

SYMBOLOGY PER ANSI Y14.5

DRAWN BY. DJR

DRAWN/DATE 6/23/05

APPVD/DATE

NOTES:

WOODBINE MFG. CO.
BUS BROWN DRIVE
WOODBINE, IOWA 51579
712-647-2050
The original TOMMY GATE® hydraulic lift

THE INFORMATION HERE IS CONFIDENTIAL AND MUST NOT BE USED IN ANYWAY DETRIMENTAL TO THE INTEREST OF WOODBINE MFG.

TITLE G2 3/4" REPLACEMENT UPRIGHT BACK ARM PIN

SALES CATEGORY	PRODUCT LINE	SCALE	FIN. WT.	PART NO.
45	8900	N	0.53	2181