ITEM NO.	QTY.	PART NO.	DESCRIPTION
1	1	010316	1.250" EXTERNAL SNAP RING ZP
2	1	011533	1.24"DIA.x4.50" PIVOT ARM PIN (TUCKUNDER)
3	1	012810	ZINC PLATED PIN CLIP (TUCKUNDER)
4	1	000508	3/8-16X3/4" HHCS GR5

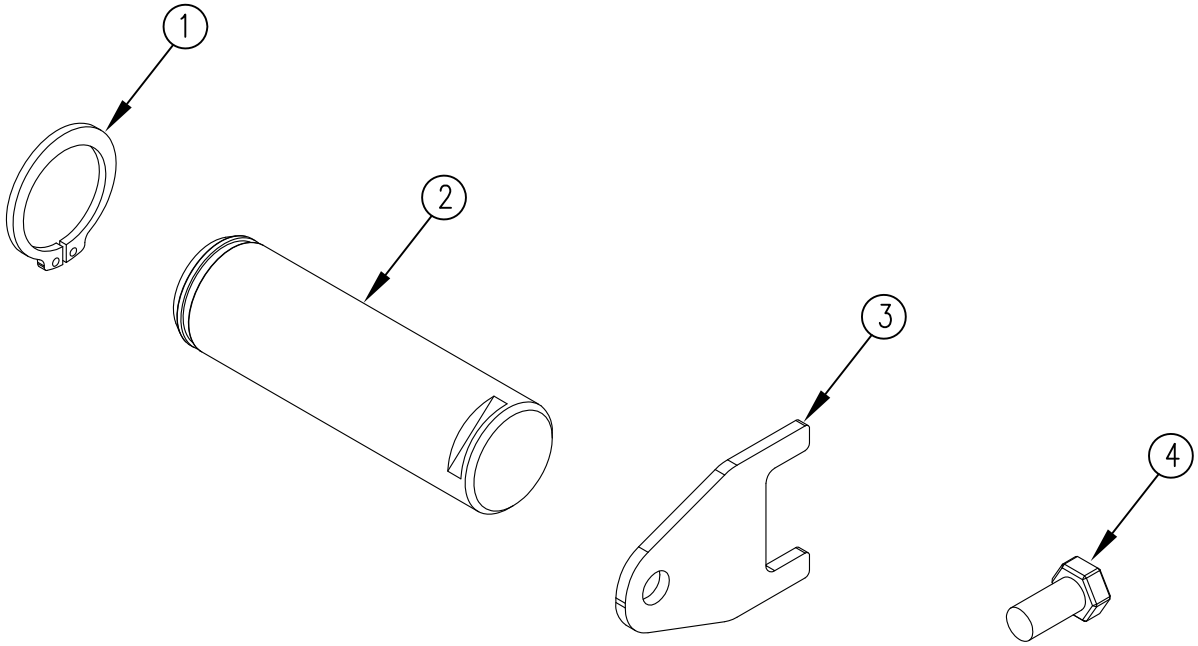

REV.	DATE	CHANGE RECORD	BY	APPVD	ECN
A	3/10/14	RELEASED TO PRODUCTION	JCB		1075

THIRD ANGLE PROJECTION

DECIMAL	2PLC	3PLC
MACHINE SAW,DRILL	.030	.015
SHEAR, PUNCH FORM	.060	.030
TORCH, WELDING ROUGH CAST	.090	.060
DRAFT 2°	ANGULAR ±1°	

FILENAME:

SYMBOLOGY PER ANSI Y14.5

DRAWN BY. JCB

DRAWN/DATE 3/10/14

APPVD/DATE

NOTES:

WOODBINE MFG. CO.
BUS BROWN DRIVE
WOODBINE, IOWA 51579
712-647-2050

The original TOMMY GATE® hydraulic lift

THE INFORMATION HERE IS CONFIDENTIAL AND MUST NOT BE USED IN ANYWAY DETRIMENTAL TO THE INTEREST OF WOODBINE MFG.

TITLE REPL. 1-1/4" LIFT ARM PIVOT PIN W/ KEEPER

SALES CATEGORY	PRODUCT LINE	SCALE	FIN. WT.	PART NO.
		1:2		12915