ITEM NO.	QTY.	PART NO.	DESCRIPTION
1	1	9799	TOGGLE SWITCH
2	1	9632	TOGGLE SWITCH BOOT – CONTROL

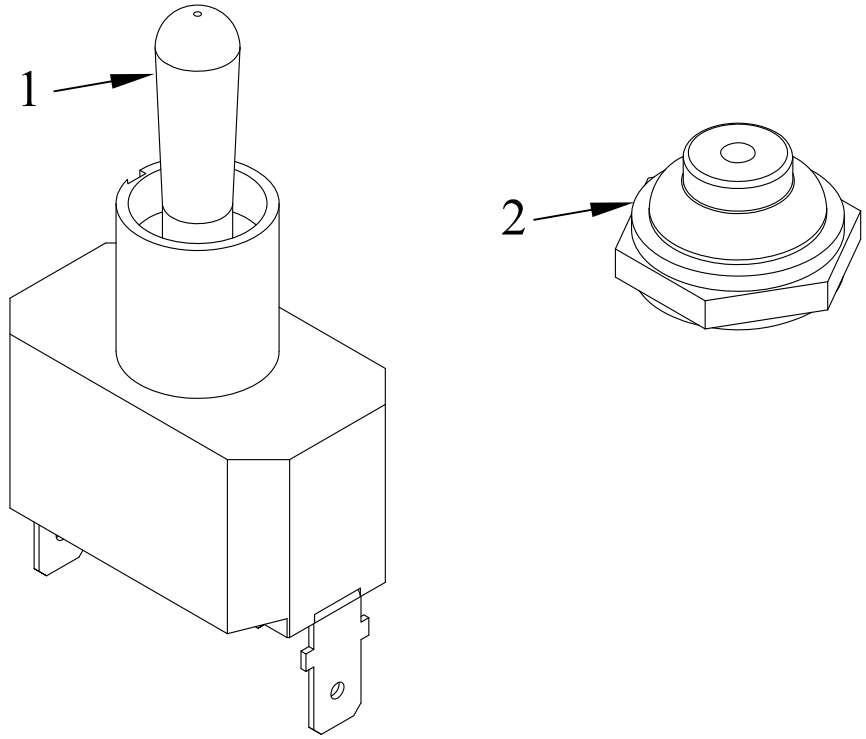

REV.	DATE	CHANGE RECORD	BY	APPVD	ECN
B	8/9/07	ADDED RUBBER BOOT	MTC	KGJ	

THIRD ANGLE PROJECTION

DECIMAL	2PLC	3PLC
MACHINE SAW,DRILL	.030	.015
SHEAR, PUNCH FORM	.060	.030
TORCH, WELDING ROUGH CAST	.090	.060

DRAFT 2° | ANGULAR ±1°

SYMBOLOGY PER ANSI Y14.5

DRAWN BY. MTC

DRAWN/DATE 2/28/06

APPVD/DATE 8/9/07

NOTES:

WOODBINE MFG. CO.
BUS BROWN DRIVE
WOODBINE, IOWA 51579

The original TOMMY GATE hydraulic lift

THE INFORMATION HERE IS CONFIDENTIAL AND MUST NOT BE USED IN ANYWAY DETRIMENTAL TO THE INTEREST OF WOODBINE MFG.

TITLE REPLACEMENT TOGGLE SWITCH ONLY

SALES CATEGORY	PRODUCT LINE	SCALE	FIN. WT.	PART NO.
		N	0.2	983