ITEM NO.	QTY.	PART NO.	DESCRIPTION
1	1	9799	TOGGLE SWITCH
2	1	9632	TOGGLE SWITCH BOOT – CONTROL

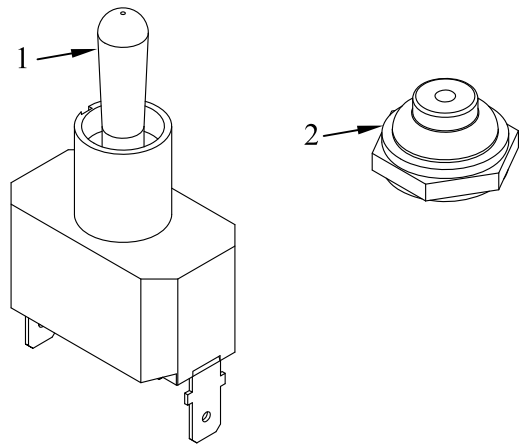

REV.	DATE	CHANGE RECORD	BY	APPVD	ECN
B	8/9/07	ADDED RUBBER BOOT	MTC	KGJ	

THIRD ANGLE PROJECTION

DECIMAL	2PLC	3PLC
MACHINE SAW,DRILL	.030	.015
SHEAR, PUNCH FORM	.060	.030
TORCH, WELDING ROUGH CAST	.090	.060

DRAFT 2° | ANGULAR ±1°

FILENAME: KITS(Repair Parts)\Cablegate\000983

SYMBOLOGY PER ANSI Y14.5

DRAWN BY. MTC

DRAWN/DATE 2/28/06

APPVD/DATE 8/9/07

NOTES:

WOODBINE MFG. CO.
BUS BROWN DRIVE
WOODBINE, IOWA 51579
712-647-2050

THE INFORMATION HERE IS CONFIDENTIAL AND MUST NOT BE USED IN ANY WAY DETRIMENTAL TO THE INTEREST OF WOODBINE MFG.

TITLE REPLACEMENT TOGGLE SWITCH ONLY

SALES CATEGORY	PRODUCT LINE	SCALE	FIN. WT.	PART NO.
45	2501	N	0.2	983

change was done in accounting, but not on any public prints until 11/28/12