ITEM NO.	QTY.	PART NO.	DESCRIPTION
1	1	3535	54–1040 STEEL TREADPL PLAT COMPL
2	2	4720	1/4"x2" COTTER PIN
3	1	10330	1.25" PUNCHED INNER HINGE TUBE (54)
4	2	4728	3/8"U–BOLT(LONG)x16x7/8x2–1/16
5	4	605	3/8–16 USS CROWN LOCK NUT
6	4	550	3/8–16 GR5 HEX NUT

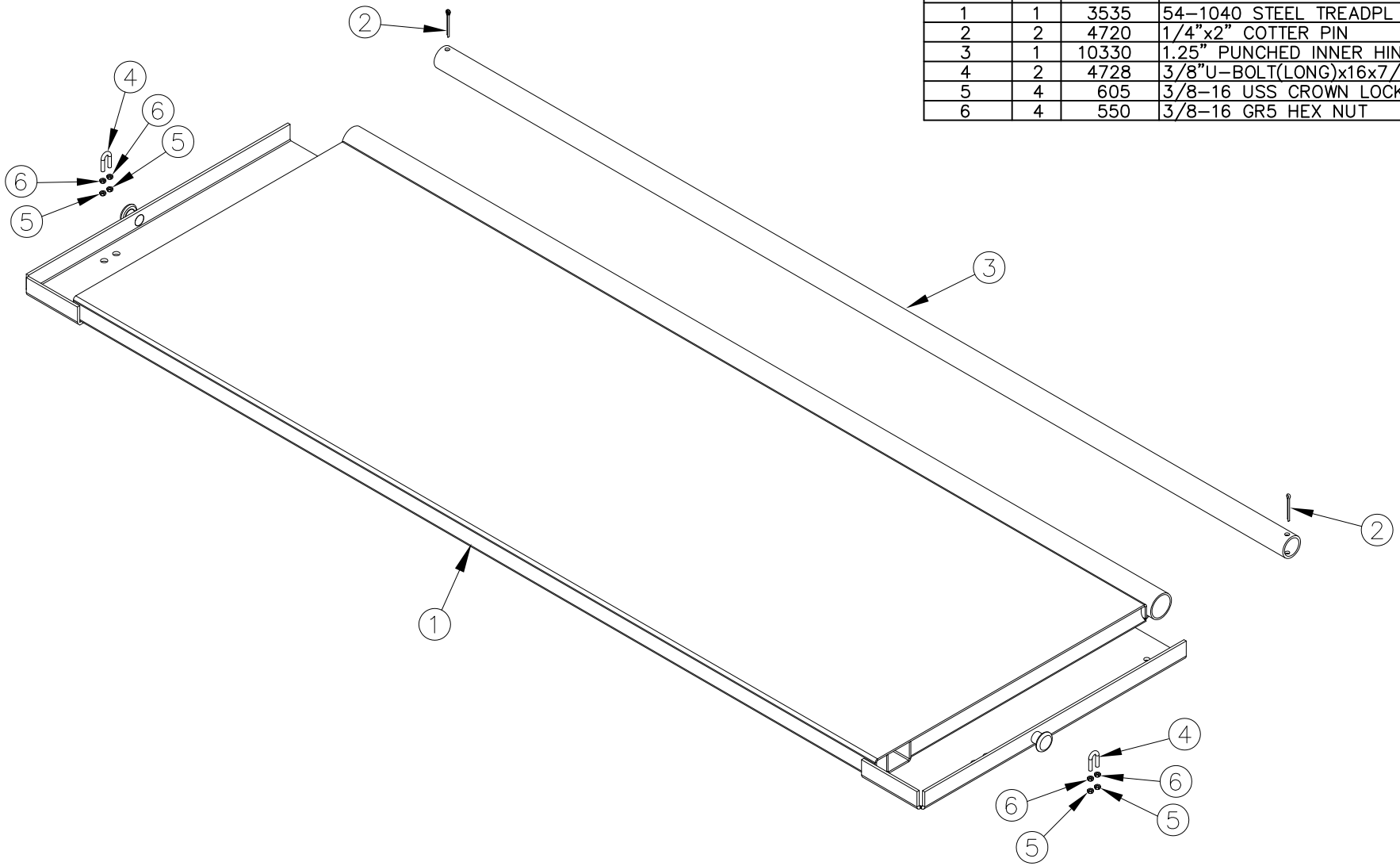

REV.	DATE	CHANGE RECORD	BY	APPVD	ECN
B	10/12/10	REPLACED 6401 WITH 10330; REPLACED 4727 WITH 4728	JCB		276

THIRD ANGLE PROJECTION

DECIMAL	2PLC	3PLC
MACHINE SAW,DRILL	.030	.015
SHEAR, PUNCH FORM	.060	.030
TORCH, WELDING ROUGH CAST	.090	.060
DRAFT 2°	ANGULAR ±1°	

FILENAME:

SYMBOLOGY PER ANSI Y14.5

DRAWN BY. DJR

DRAWN/DATE 10/4/04

APPVD/DATE

NOTES:

WOODBINE MFG. CO.
BUS BROWN DRIVE
WOODBINE, IOWA 51579
712–647–2050
The original TOMMY GATE hydraulic lift

THE INFORMATION HERE IS CONFIDENTIAL AND MUST NOT BE USED IN ANYWAY DETRIMENTAL TO THE INTEREST OF WOODBINE MFG.

TITLE (54–1040) TP REPLACMENT PLATFORM

SALES CATEGORY	PRODUCT LINE	SCALE	FIN. WT.	PART NO.
		N		1650