ITEM NO.	QTY.	PART NO.	DESCRIPTION
1	1	003061	PLATFORM PIVOT SUB ASSEMBLY (CANTILEVER)
2	2	006417	CANTILEVER TENSION ARM PIN W/ KEEPER
3	2	002025	3/4"EXTERNAL SNAP RING, PLATED
4	3	011084	1/4-20x1" FLAT HEAD SOCKET CAP SCREW ZP
5	3	011081	1/4-20 KEPS NUT ZINC
6	1	003055	CANTILEVER LIFT ARM PIN W/ KEEPER
7	1	010316	1.250" EXTERNAL SNAP RING ZP
8	1	010502	5/16-18X1" HHCS GR5
9	1	000584	5/16" SPRING LOCK WASHER
10	1	000554	5/16-18 GR5 NUT
11	3	010494	1/2-13 X 3-3/4" HHCS GR 8 PL
12	3	000588	1/2 CROWN LOCK NUT
13	1	011103	FOLD UP BUMPER
14	1	009132	IOWA STATE MAP DECAL

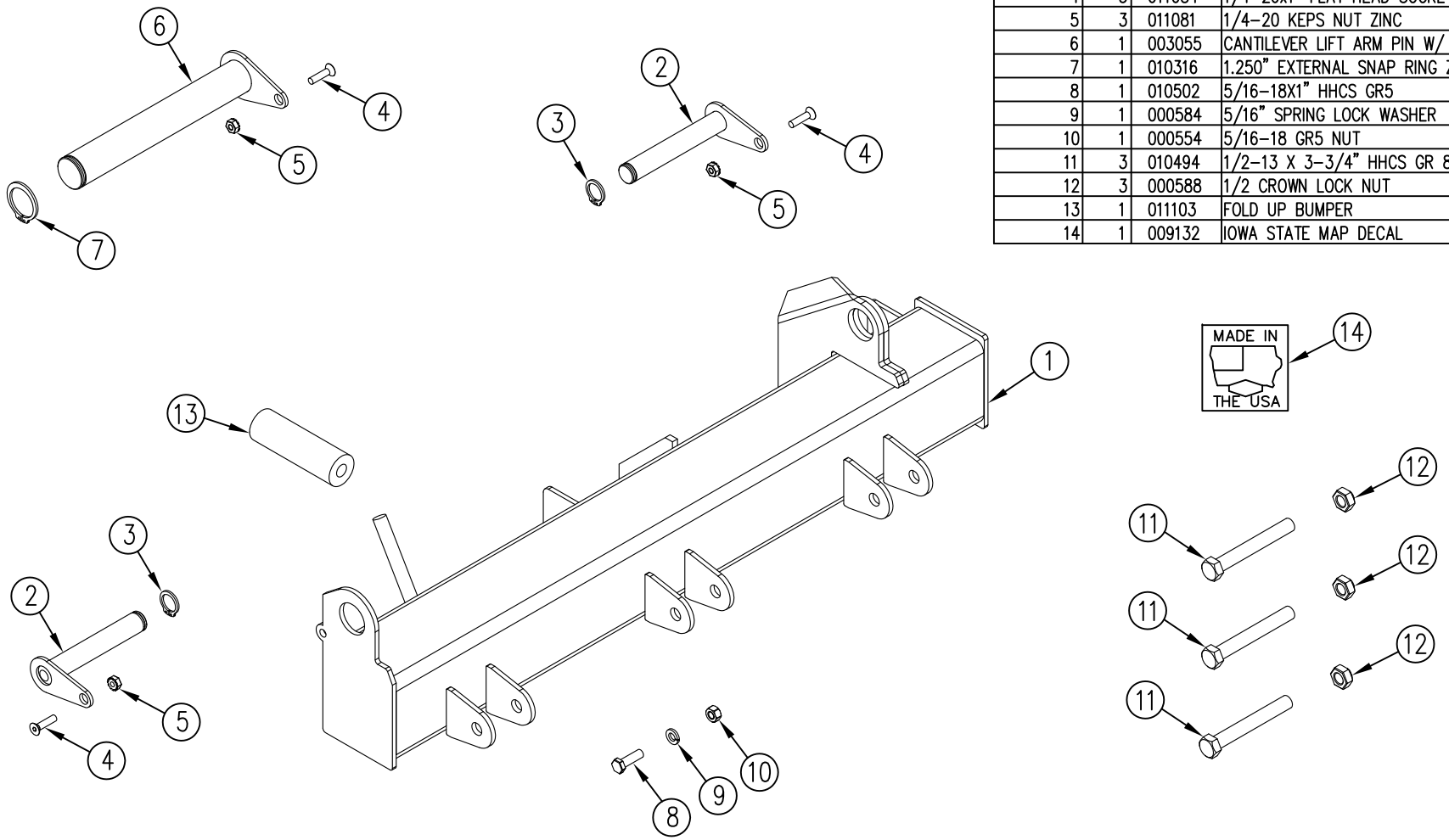

REV.	DATE	CHANGE RECORD	BY	APPVD	ECN
B	2/6/12	ADDED 9132	JCB		561
A	6/29/11	RELEASED TO PRODUCTION	JCB		450

THIRD ANGLE PROJECTION

DECIMAL	2PLC	3PLC
MACHINE SAW,DRILL	.030	.015
SHEAR, PUNCH FORM	.060	.030
TORCH, WELDING ROUGH CAST	.090	.060

DRAFT 2° | ANGULAR ±1°

FILENAME:

SYMBOLOGY PER ANSI Y14.5

DRAWN BY. JCB

DRAWN/DATE 6/29/11

APPVD/DATE

NOTES:

WOODBINE MFG. CO.
BUS BROWN DRIVE
WOODBINE, IOWA 51579
712-647-2050
The original TOMMY GATE hydraulic lift

THE INFORMATION HERE IS CONFIDENTIAL AND MUST NOT BE USED IN ANYWAY DETRIMENTAL TO THE INTEREST OF WOODBINE MFG.

TITLE
CANTILEVER REPL. PLATFORM PIVOT SUB ASSEMBLY

SALES CATEGORY	PRODUCT LINE	SCALE	FIN. WT.	PART NO.
		1:6		11262