ITEM NO.	QTY.	PART NO.	DESCRIPTION
1	1	018029	PLATED G2 FORMED LOWER ARM w/BUSHINGS(50)
2	1	002879	G2 .75" DIA.x2.109"PIN w/KEEPER 42/50
3	2	002025	3/4" EXTERNAL SNAP RING(G2) PLATED
4	2	000756	1/4-20x3/4" PHI FH TY F SS (G2)
5	1	002050	G2 .75"DIA.x3.047"PIN w/KEEPER(42)

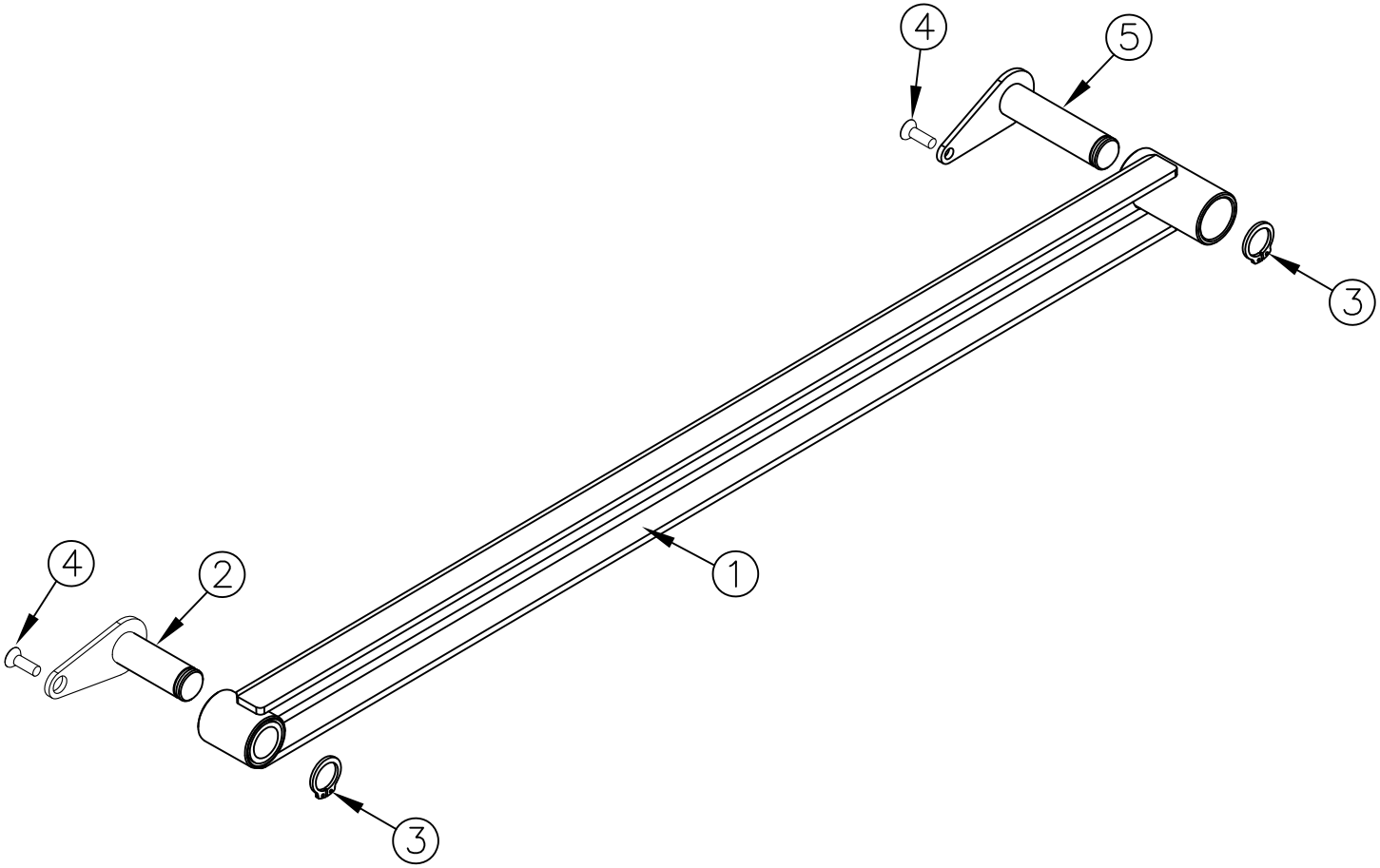

REV.	DATE	CHANGE RECORD	BY	APPVD	ECN
C	1/27/25	18029 WAS 17393	AAS		3101
B	5/18/22	17393 WAS 2708	AAS		2755
A	12/8/16	RELEASED TO PRODUCTION	AAS		1746

THIRD ANGLE PROJECTION

DECIMAL	2PLC	3PLC
MACHINE SAW,DRILL	.030	.015
SHEAR, PUNCH FORM	.060	.030
TORCH, WELDING ROUGH CAST	.090	.060
DRAFT 2°	ANGULAR ±1°	

FILENAME:

SYMBOLOGY PER ANSI Y14.5

DRAWN BY. AAS

DRAWN/DATE 12/8/16

APPVD/DATE

SALES CATEGORY

NOTES:

WOODBINE MFG. CO.
BUS BROWN DRIVE
WOODBINE, IOWA 51579

THE ORIGINAL TOMMY GATE EST. 1945

THE INFORMATION HERE IS CONFIDENTIAL AND MUST NOT BE USED IN ANYWAY DETRIMENTAL TO THE INTEREST OF WOODBINE MFG.

TITLE
G2 (50) REPLACEMENT LOWER ARM w/PINS & BUSHINGS

GALVANIZED

PRODUCT LINE | SCALE 1:4 | FIN. WT. | PART NO. 14907