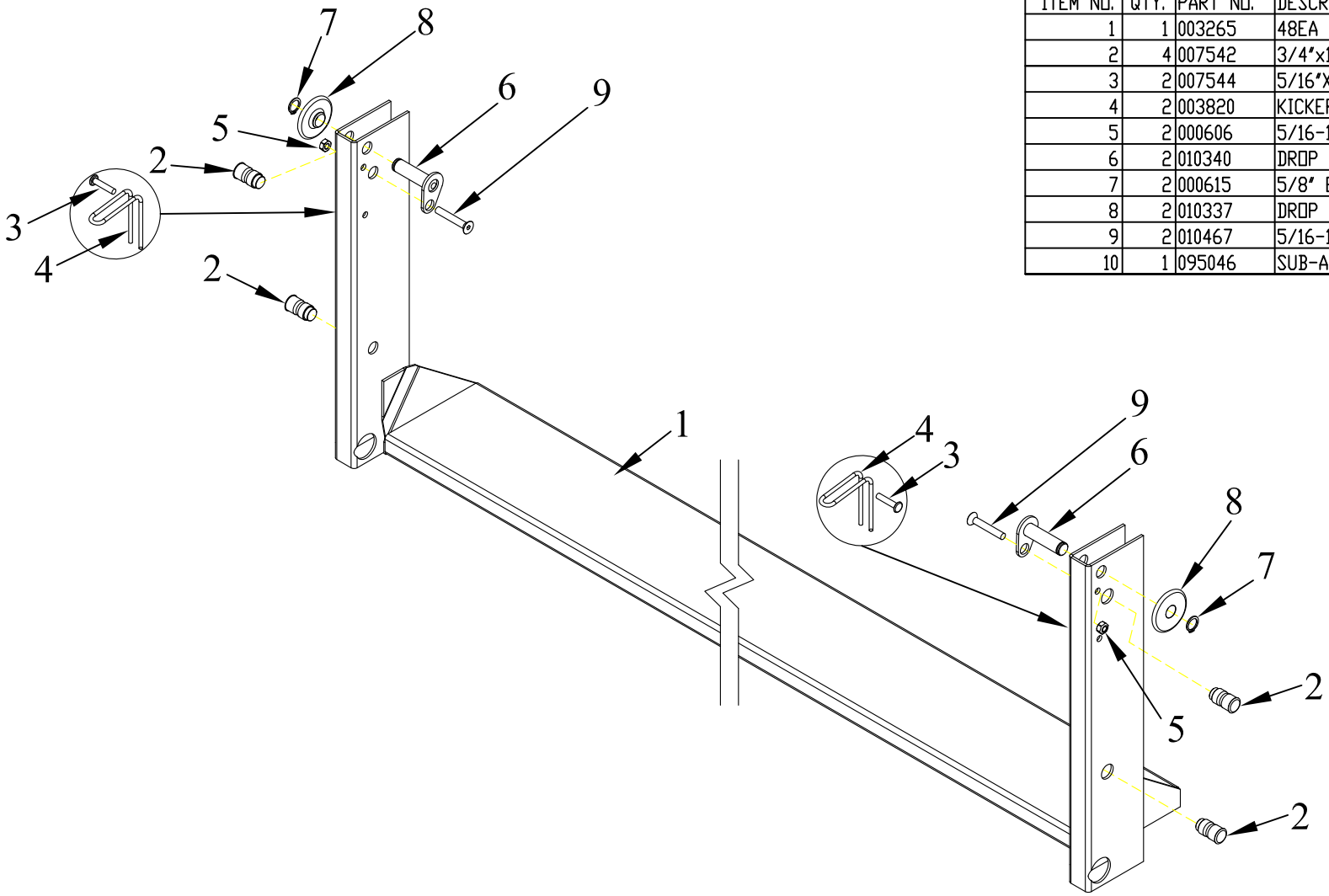

ITEM NO.	QTY.	PART NO.	DESCRIPTION
1	1	003265	48EA SUB ASSEMBLY WELDMENT
2	4	007542	3/4"x1-1/2"ARM PIN
3	2	007544	5/16"X1/1/2" F.H.RIVET
4	2	003820	KICKER SPRING
5	2	000606	5/16-18 USS CROWN LOCK NUT
6	2	010340	DROP PIN ASSEMBLY
7	2	000615	5/8" EXTERNAL RETAINING RING-PLATED
8	2	010337	DROP CHAIN MACHINED WASHER
9	2	010467	5/16-18 X 2" FLHD SHCS - ZINC
10	1	095046	SUB-ASSEMBLY REPLACEMENT- ORIGINAL SERIES

REV.	DATE	CHANGE RECORD	BY	APPVD	ECN
C	3/2/11	REPLACED 95042 WITH 95046	JCB		415
B	2/24/10	REMOVED PN4769 AND 3818; ADDED PN10340, 615, 10337, 10467, 7544, 3820, 606	MTC		270

THIRD ANGLE PROJECTION

DECIMAL	2PLC	3PLC
MACHINE SAW,DRILL	.030	.015
SHEAR, PUNCH FORM	.060	.030
TORCH, WELDING ROUGH CAST	.090	.060
DRAFT 2°	ANGULAR ±1°	

FILENAME:

SYMBOLOGY PER ANSI Y14.5

DRAWN BY. DJR

DRAWN/DATE 5/26/04

NOTES:

TITLE 48EA REPLACEMENT SUB ASSEMBLY

SCALE N

FIN. WT.

PART NO. 3589

WOODBINE MFG. CO.
BUS BROWN DRIVE
WOODBINE, IOWA 51579
712-647-2050
The original TOMMY GATE® hydraulic lift

THE INFORMATION HERE IS CONFIDENTIAL AND MUST NOT BE USED IN ANYWAY DETRIMENTAL TO THE INTEREST OF WOODBINE MFG.