ITEM NO.	QTY.	PART NO.	DESCRIPTION
1	1	013767	7GA.WALLx1.5"x3"x15.38"RECT.TUBE(CANTILEVER)TRANSIT
2	2	010324	0.19"x3"x3" PLATE(CANTILEVER)
3	2	010490	1/2-13x6-1/2"HHCS GR5
4	2	000573	1/2" SPRING LOCK WASHER
5	2	000551	1/2-13 GRADE 5 HEX NUT (ZINC)

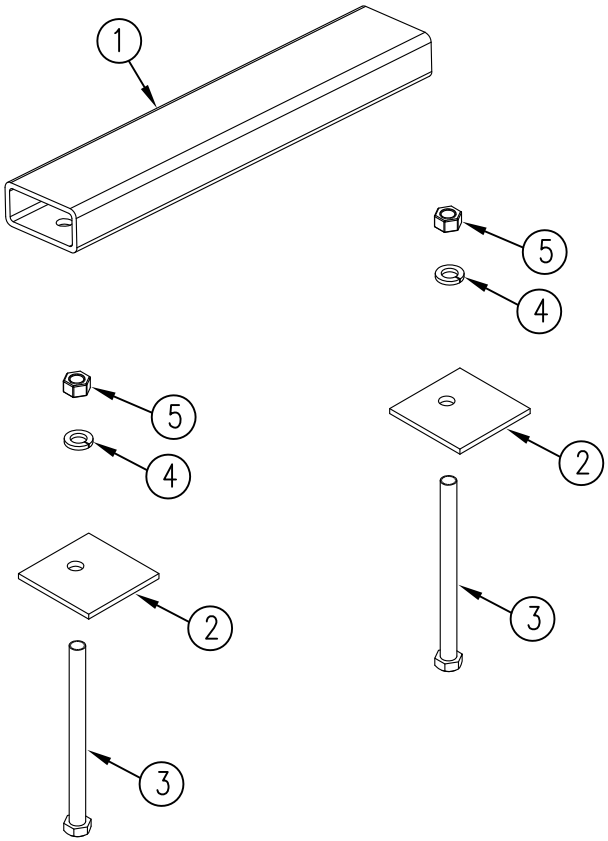

REV.	DATE	CHANGE RECORD	BY	APPVD	ECN
A	10/2/14	RELEASED TO PRODUCTION	JCB		1217

THIRD ANGLE PROJECTION

DECIMAL	2PLC	3PLC
MACHINE SAW,DRILL	.030	.015
SHEAR, PUNCH FORM	.060	.030
TORCH, WELDING ROUGH CAST	.090	.060

DRAFT 2° | ANGULAR ±1°

FILENAME:

SYMBOLOGY PER ANSI Y14.5

DRAWN BY. JCB

DRAWN/DATE 10/2/14

APPVD/DATE

NOTES:

WOODBINE MFG. CO.
BUS BROWN DRIVE
WOODBINE, IOWA 51579
712-647-2050
The original TOMMY GATE® hydraulic lift

THE INFORMATION HERE IS CONFIDENTIAL AND MUST NOT BE USED IN ANYWAY DETRIMENTAL TO THE INTEREST OF WOODBINE MFG.

TITLE
REPLACEMENT CANTILEVER STABILIZER TUBE (TRANSIT)

SALES CATEGORY	PRODUCT LINE	SCALE	FIN. WT.	PART NO.
		1:6		14116