ITEM NO.	QTY.	PART NO.	DESCRIPTION
1	1	3393	MINI–F9 EA FLIPPER
2	1	8929	EA FLIPPER HINGE ASSEMBLY–LEFT
3	1	8930	EA FLIPPER HINGE ASSEMBLY–RIGHT

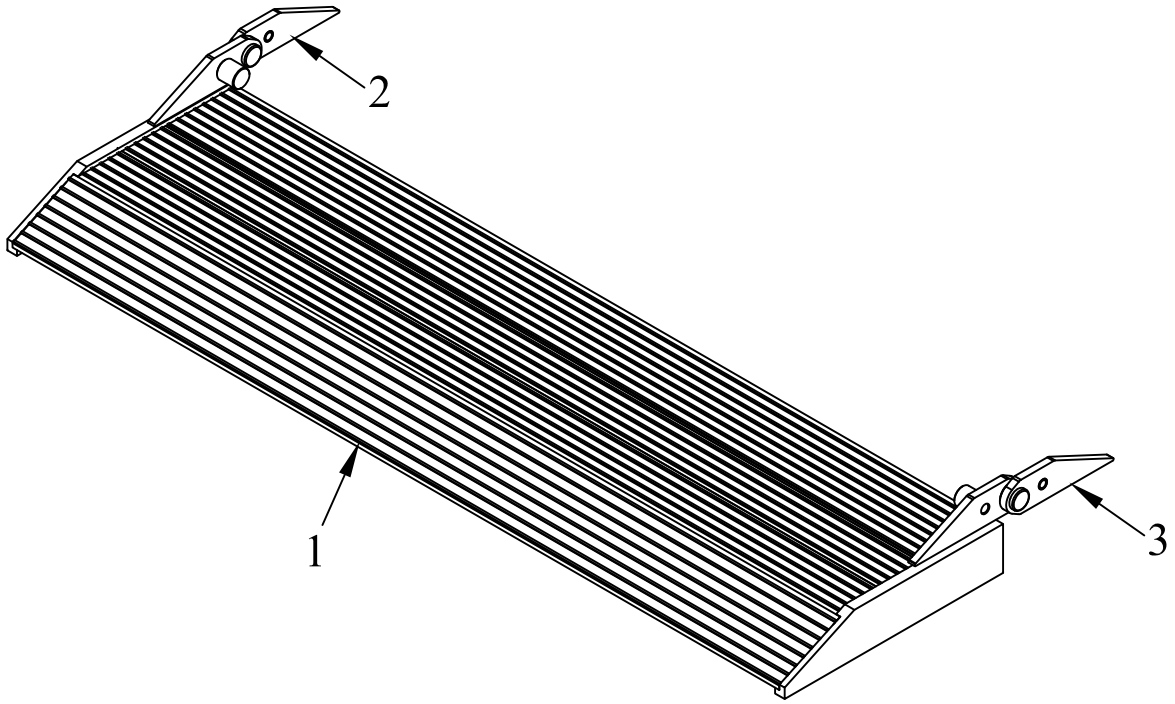

REV.	DATE	CHANGE RECORD	BY	APPVD	ECN

THIRD ANGLE PROJECTION

DECIMAL	2PLC	3PLC
MACHINE SAW,DRILL	.030	.015
SHEAR, PUNCH FORM	.060	.030
TORCH, WELDING ROUGH CAST	.090	.060

DRAFT 2° | ANGULAR ±1°

FILENAME:

SYMBOLOGY PER ANSI Y14.5

DRAWN BY. DJR

DRAWN/DATE 12/18/03

APPVD/DATE

NOTES:

WOODBINE MFG. CO.
BUS BROWN DRIVE
WOODBINE, IOWA 51579
712–647–2050
The original TOMMY GATE® hydraulic lift

THE INFORMATION HERE IS CONFIDENTIAL AND MUST NOT BE USED IN ANYWAY DETRIMENTAL TO THE INTEREST OF WOODBINE MFG.

TITLE MINI–F9 REPLACEMENT EA FLIPPER

SALES CATEGORY	PRODUCT LINE	SCALE	FIN. WT.	PART NO.
45	8002	N		1796