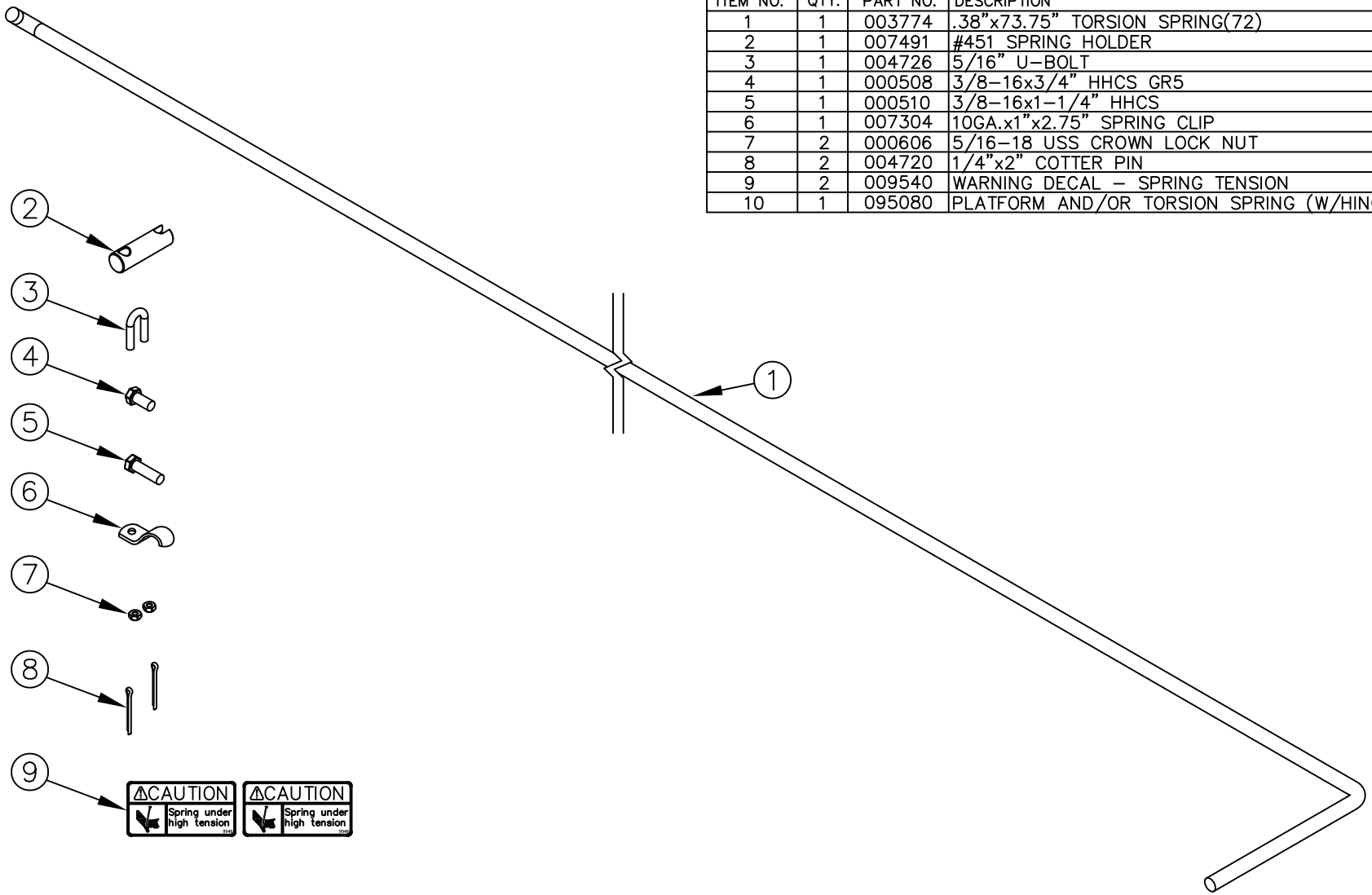

ITEM NO.	QTY.	PART NO.	DESCRIPTION
1	1	003774	.38"x73.75" TORSION SPRING(72)
2	1	007491	#451 SPRING HOLDER
3	1	004726	5/16" U-BOLT
4	1	000508	3/8-16x3/4" HHCS GR5
5	1	000510	3/8-16x1-1/4" HHCS
6	1	007304	10GA.x1"x2.75" SPRING CLIP
7	2	000606	5/16-18 USS CROWN LOCK NUT
8	2	004720	1/4"x2" COTTER PIN
9	2	009540	WARNING DECAL - SPRING TENSION
10	1	095080	PLATFORM AND/OR TORSION SPRING (W/HINGE TUBE)

REV.	DATE	CHANGE RECORD	BY	APPVD	ECN
B	3/29/11	REPLACED 1143 KIT WITH INDIVIDUAL PARTS; ADDED 95080	JCB		427

THIRD ANGLE PROJECTION

DECIMAL	2PLC	3PLC
MACHINE SAW,DRILL	.030	.015
SHEAR, PUNCH FORM	.060	.030
TORCH, WELDING ROUGH CAST	.090	.060

DRAFT 2° | ANGULAR ±1°

FILENAME:

SYMBOLOGY PER ANSI Y14.5

DRAWN BY. DJR

DRAWN/DATE 6/18/04

APPVD/DATE

NOTES:

WOODBINE MFG. CO.
BUS BROWN DRIVE
WOODBINE, IOWA 51579
712-647-2050
The original TOMMY GATE® hydraulic lift

THE INFORMATION HERE IS CONFIDENTIAL AND MUST NOT BE USED IN ANYWAY DETRIMENTAL TO THE INTEREST OF WOODBINE MFG.

TITLE TORSION SPRING w/HARDWARE(72)

SALES CATEGORY	PRODUCT LINE	SCALE	FIN. WT.	PART NO.
		N		3692