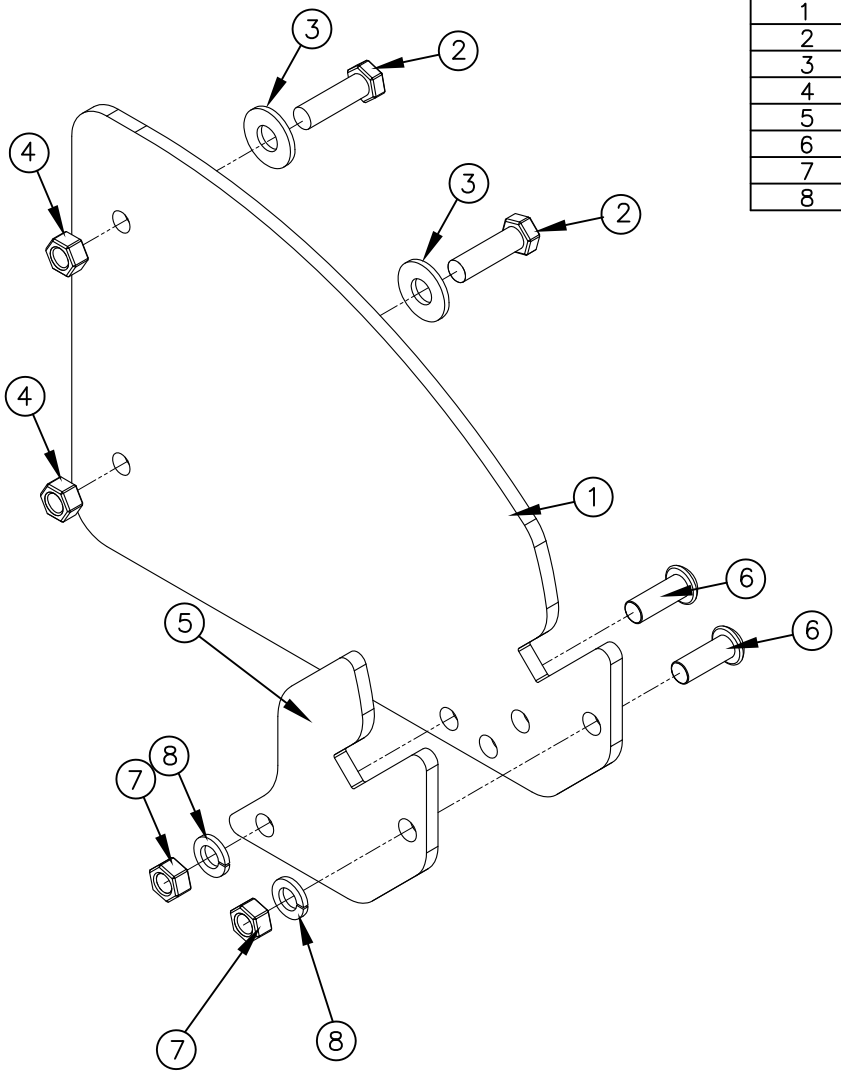

ITEM NO.	QTY.	PART NO.	DESCRIPTION
1	1	002593	PLATED 0.25"x8"x11.563" AL LATCH (R-FOLD)
2	2	000510	3/8-16x1-1/4" HHCS GR5
3	2	000575	3/8 USS FLAT WASHER
4	2	000597	3/8-16 2 WAY LOCK NUT
5	1	002616	RAIL LATCH WEAR PL-ZINC PLATED
6	2	000737	3/8-16x1" BHCS GR5- ZINC PLATED
7	1	000550	3/8-16 GR5 HEX NUT
8	2	000572	3/8" SPRING LOCK WASHER

REV.	DATE	CHANGE RECORD	BY	APPVD	ECN
A	9/24/08	DRAWN IN AUTOCAD	JCB	JCB	

THIRD ANGLE PROJECTION

DECIMAL	2PLC	3PLC
MACHINE SAW,DRILL	.030	.015
SHEAR, PUNCH FORM	.060	.030
TORCH, WELDING ROUGH CAST	.090	.060
DRAFT 2°	ANGULAR ±1°	

FILENAME:

SYMBOLOGY PER ANSI Y14.5

DRAWN BY. JCB

DRAWN/DATE 9/24/08

APPVD/DATE 9/24/08

SALES CATEGORY 45

NOTES:

WOODBINE MFG. CO.
BUS BROWN DRIVE
WOODBINE, IOWA 51579
712-647-2050
The original TOMMY GATE® hydraulic lift

THE INFORMATION HERE IS CONFIDENTIAL AND MUST NOT BE USED IN ANYWAY DETRIMENTAL TO THE INTEREST OF WOODBINE MFG.

TITLE
ALUMINUM R-FOLD RAILGATE REPLACEMENT LATCH PLATE-LEFT

PRODUCT LINE	SCALE	FIN. WT.	PART NO.
8950	1:3	6.25	2870