ITEM NO.	QTY.	PART NO.	DESCRIPTION
1	1	008290	73 STEEL RAIL BOX COVER WELDMENT (N)
2	3	000631	5/16-18 SERRATED FLANGENUT (WHIZLOCK)
3	1	004042	REC. OVAL CLEAR LIGHT ONLY-ECONO 60(12VDC)
4	4	004043	REC. OVAL RED LIGHT ONLY-ECONO 60 (12VDC)
5	5	004041	BLACK GROMMET - ECONO 60
6	2	000628	PLASTIC INSERT NUT FOR LICENSE MOUNT
7	2	000620	1/4-20x1/2" PN HD TY FS(G2)
8	6	009077	3/16"x7-1/2" CABLE TIE
9	1	003050	LICENSE PLATE LIGHT (H1)
10	2	001485	10-32 X 3/4" HEX HEAD BOLT
11	2	000556	10-32 KEPS NUT
12	2	009089	16-14 HEAT SHRINK BUTT CONNECTOR
13	1	009556	BOX COVER DANGER DECAL
14	1	003968	LOGO-"ORIGINAL TOMMY GATE" DECAL

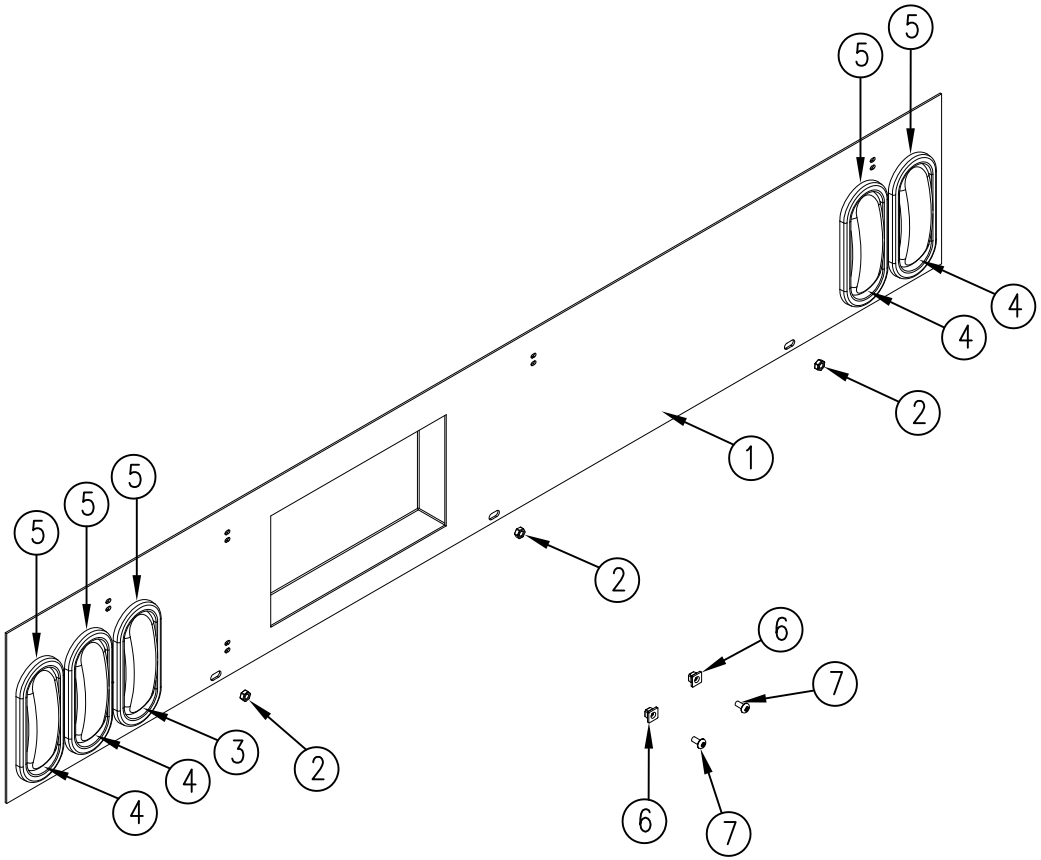

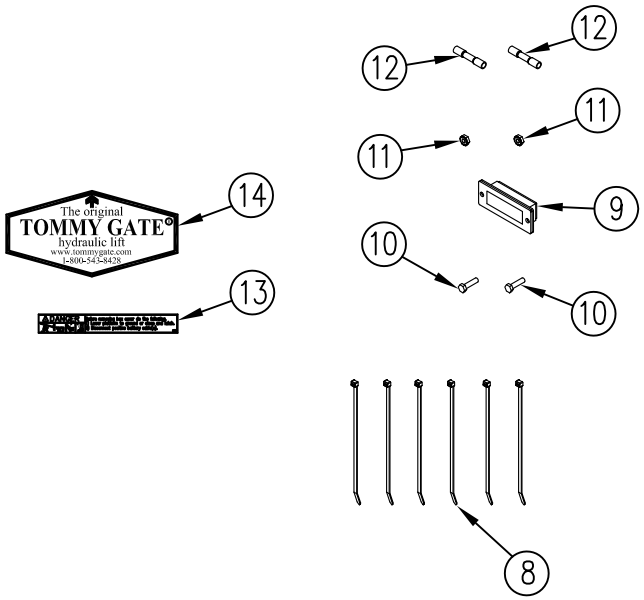

REV.	DATE	CHANGE RECORD	BY	APPVD	ECN
C	1/18/13	REMOVED (6) 6720	JCB		823
B	2/3/12	ADDED 9556 & 3968; REPLACED 1111 WITH (2) 620 & (2) 628; REPLACED 4036 WITH (1) 3050, (2) 1485, (2) 556, (2)9089	JCB		386
A	8/29/07	DRAWN IN AUTOCAD	JCB	KGJ	

THIRD ANGLE PROJECTION

DECIMAL	2PLC	3PLC
MACHINE SAW,DRILL	.030	.015
SHEAR, PUNCH FORM	.060	.030
TORCH, WELDING ROUGH CAST	.090	.060
DRAFT 2°	ANGULAR ±1°	

FILENAME:

SYMBOLOGY PER ANSI Y14.5

DRAWN BY. JCB

DRAWN/DATE 8/29/07

APPVD/DATE

NOTES:

WOODBINE MFG. CO.
BUS BROWN DRIVE
WOODBINE, IOWA 51579
712-647-2050
The original TOMMY GATE hydraulic lift

THE INFORMATION HERE IS CONFIDENTIAL AND MUST NOT BE USED IN ANYWAY DETRIMENTAL TO THE INTEREST OF WOODBINE MFG.

TITLE
REPLACEMENT STEEL BOX COVER w/LIGHTS(73) (12VDC) (N)

SALES CATEGORY	PRODUCT LINE	SCALE	FIN. WT.	PART NO.
		1:10		4156