ITEM NO.	QTY.	PART NO.	DESCRIPTION
1	1	003298	EA FLIPPER ONLY(81LP)17"
2	1	008929	EA FLIPPER HINGE ASSEMBLY–RIGHT
3	1	008930	EA FLIPPER HINGE ASSEMBLY–LEFT

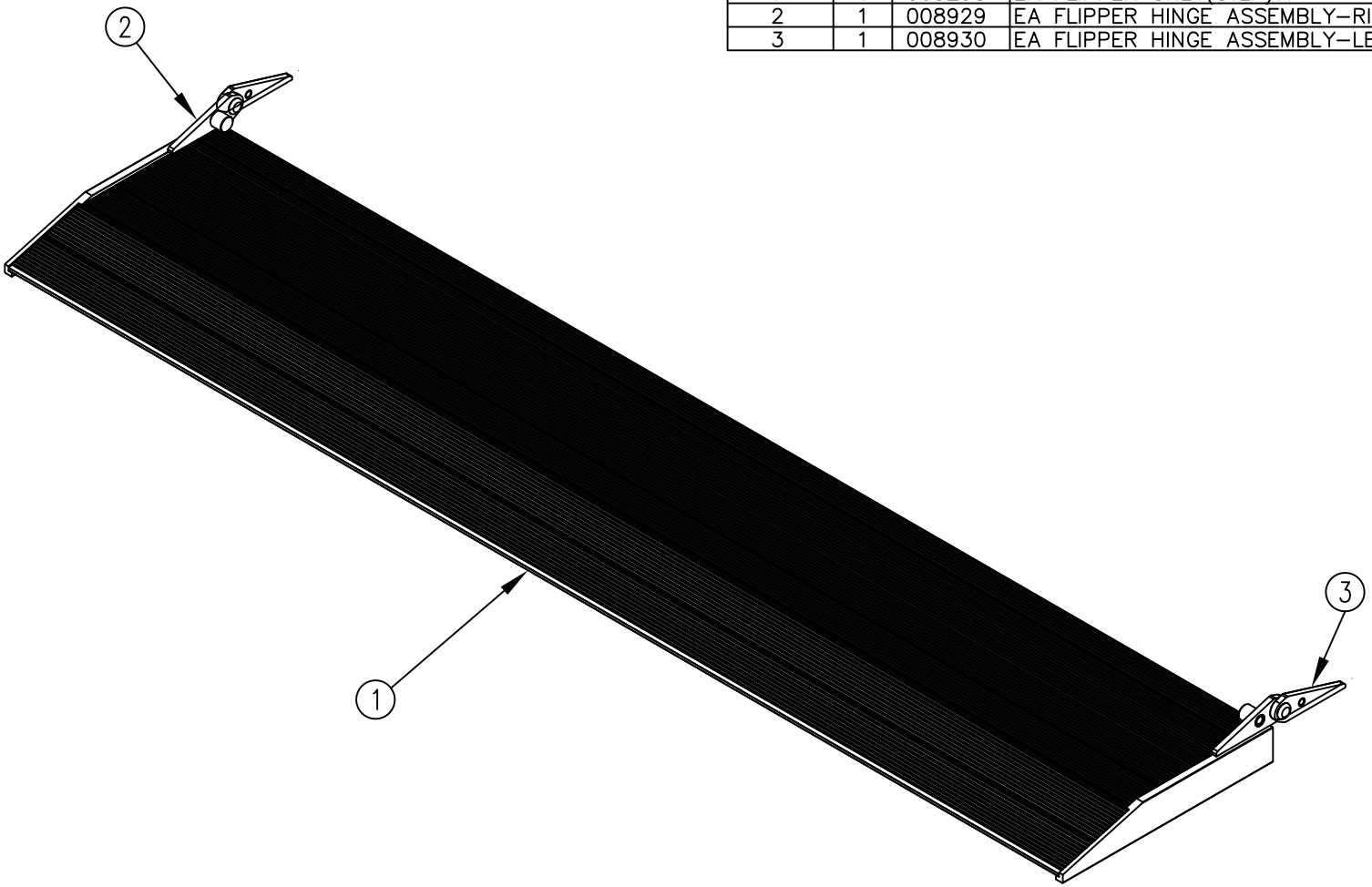

REV.	DATE	CHANGE RECORD	BY	APPVD	ECN
A	10/24/24	RELEASED TO PRODUCTION	AAS		3068

THIRD ANGLE PROJECTION

UNLESS OTHERWISE SPECIFIED

DIMENSIONS ARE IN INCHES
TOLERANCES:
FRACTIONAL ±1/16
ANGULAR MACH ±1°
BEND ±1°
TWO PLACE DECIMAL ±0.030
THREE PLACE DECIMAL ±0.010

DRAWN BY AAS

DRAWN/DATE 10/24/24

APPVD/DATE —

DO NOT SCALE DRAWING

NOTES:

WOODBINE MFG. CO.
BUS BROWN DRIVE
WOODBINE, IOWA 51579

TITLE
REPLACEMENT 81 LOW PRO EA FLIPPER

THE INFORMATION HERE IS CONFIDENTIAL AND MUST NOT BE USED IN ANY WAY DETRIMENTAL TO THE INTEREST OF WOODBINE MFG.

SCALE 1:10

WEIGHT –

PART NO. 18424