ITEM NO.	QTY.	PART NO.	DESCRIPTION
1	1	3534	48–1036 STEEL TREADPL PLAT COMPL
2	2	4720	1/4"x2" COTTER PIN
3	1	10329	1.25" PUNCHED INNER HINGE TUBE (48)
4	2	4728	3/8"U–BOLT(LONG)x16x7/8x2–1/16
5	4	605	3/8–16 USS CROWN LOCK NUT
6	4	550	3/8–16 GR5 HEX NUT
7	2	*9540	CAUTION DECAL – SPRING TENSION
8	1	9513	DECAL SHEET–CABLE/G2 W/WEIGHT CAP.
9	1	95080	(C)(G)PLAT/TORSION SPRNG(W/HINGE TUBE)

* DO NOT USE IN ACCOUNTING BOM

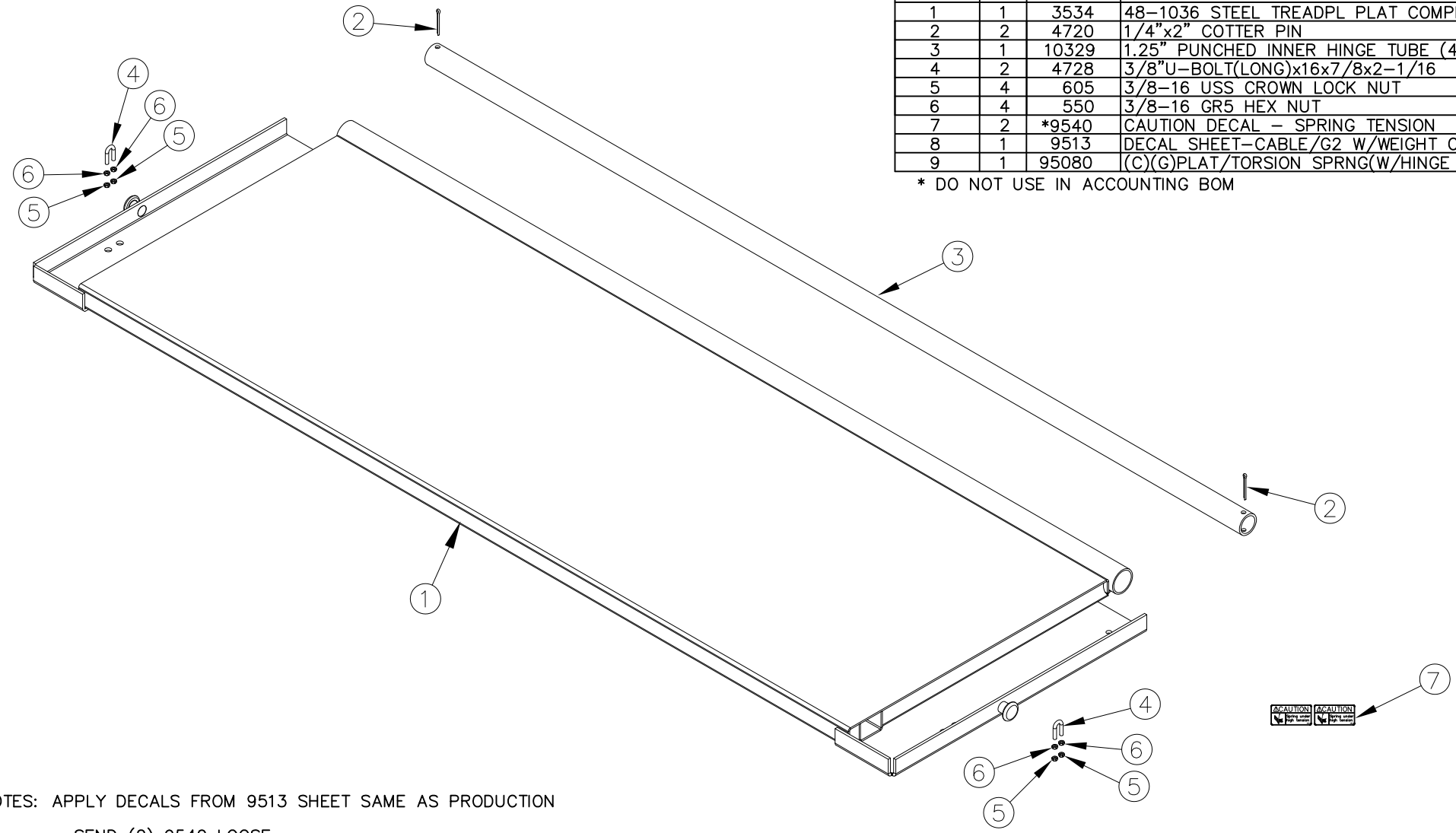

NOTES: APPLY DECALS FROM 9513 SHEET SAME AS PRODUCTION

SEND (2) 9540 LOOSE

REV.	DATE	CHANGE RECORD	BY	APPVD	ECN
C	8/26/22	ADDED 95080, 9513 AND 9540	AAS		2780
B	10/12/10	REPLACED 6400 WITH 10329; REPLACED 4727 WITH 4728	JCB		276

THIRD ANGLE PROJECTION

DECIMAL	2PLC	3PLC
MACHINE SAW,DRILL	.030	.015
SHEAR, PUNCH FORM	.060	.030
TORCH, WELDING ROUGH CAST	.090	.060

DRAFT 2° | ANGULAR ±1°

FILENAME:

SYMBOLOGY PER ANSI Y14.5

DRAWN BY. DJR

DRAWN/DATE 10/6/04

APPVD/DATE

NOTES:

WOODBINE MFG. CO.
BUS BROWN DRIVE
WOODBINE, IOWA 51579

The original TOMMY GATE hydraulic lift

THE INFORMATION HERE IS CONFIDENTIAL AND MUST NOT BE USED IN ANYWAY DETRIMENTAL TO THE INTEREST OF WOODBINE MFG.

TITLE (48–1036) TP REPLACEMENT PLATFORM

SALES CATEGORY	PRODUCT LINE	SCALE	FIN. WT.	PART NO.
		N		1646