| ITEM NO. | QTY. | PART NO. | DESCRIPTION |
|---|---|---|---|
| 1 | 1 | 013860 | MONARCH UNIT3552-0119 (CANTILEVER)TRANSIT |
| 2 | 0.475 GAL | 001092 | WINTER GRADE OIL |
| 3 | 1 | 004403* | VENT PLUG |
| 4 | 1 | 015386 | .25" THREE WAY TERMINAL SPLITTER. |
| 5 | 1 | 095113 | CANTILEVER POWER UNIT REPLACEMENT INSTR. |

*ACCOUNTING-DO NOT USE FOR B.O.M.

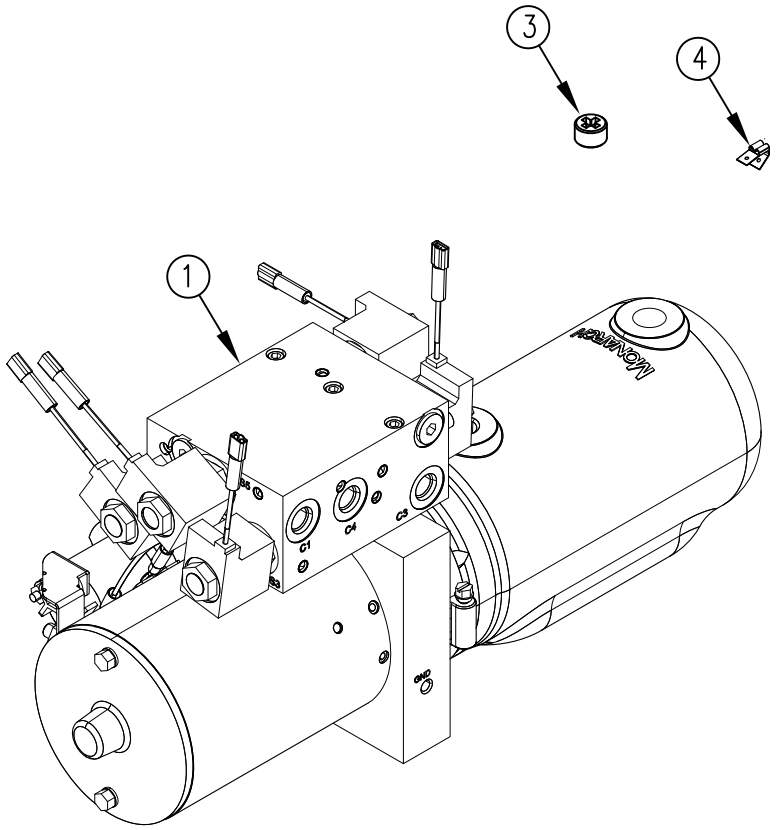


| REV. | DATE | CHANGE RECORD | BY | APPVD | ECN |
|---|---|---|---|---|---|
| A | 3/13/25 | RELEASED TO PRODUCTION | AAS | | 3130 |

THIRD ANGLE PROJECTION

| DECIMAL | 2PLC | 3PLC |
|---|---|---|
| MACHINE SAW,DRILL | .030 | .015 |
| SHEAR, PUNCH FORM | .060 | .030 |
| TORCH, WELDING ROUGH CAST | .090 | .060 |

DRAFT 2° | ANGULAR ±1°

FILENAME:

SYMBOLOGY PER ANSI Y14.5

DRAWN BY. AAS

DRAWN/DATE 3/13/25

APPVD/DATE

SALES CATEGORY

NOTES:

WOODBINE MFG. CO.
BUS BROWN DRIVE
WOODBINE, IOWA 51579

THE ORIGINAL TOMMY GATE EST. 1948

THE INFORMATION HERE IS CONFIDENTIAL AND MUST NOT BE USED IN ANYWAY DETRIMENTAL TO THE INTEREST OF WOODBINE MFG.

TITLE REPLACEMENT 1330 (CANTILEVER) PUMP & MOTOR UNIT W/WINTER GRADE OIL (2750)

PRODUCT LINE | SCALE 1:4 | FIN. WT. | PART NO. 18571