| ITEM NO. | QTY. | PART NO. | DESCRIPTION |
|---|---|---|---|
| 1 | 1 | 2067 | (86) 42+6" TREADPLATE PLATFORM COMPLETE |
| 2 | 1 | 5044 | 1/2" SQ. TORSION SPRING (86) |
| 3 | 2 | 4727 | 3/8"U-BOLT(SHORT)x16x7/8x1-1/2 |
| 4 | 4 | 605 | 3/8-16 USS CROWN LOCK NUT |
| 5 | 4 | 550 | 3/8-16 GR5 HEX NUT |
| 6 | 2 | 587 | 1/2-13x1" HHCS GR5 |
| 7 | 1 | 551 | 1/2-13 GR5 HEX NUT (ZINC) |
| 8 | 1 | 7433 | DRIVER'S SIDE SQ SPRING HOLDER |
| 9 | 1 | 7435 | PASS SIDE SQ SPRING HOLDER(86-91) |
| 10 | 2 | 573 | 1/2" SPRING LOCKWASHER |
| 11 | 1 | 9513 | DECAL SHEET - CABLE/G2 W/WEIGHT CAP. |
| 12 | 2 | 9540* | CAUTION DECAL - SPRING TENSION |
| 13 | 1 | 95064 | PLAT. AND/OR TORSION SPRING INSTRUCTIONS |

*DO NOT INCLUDE IN ACCOUNTING BOM

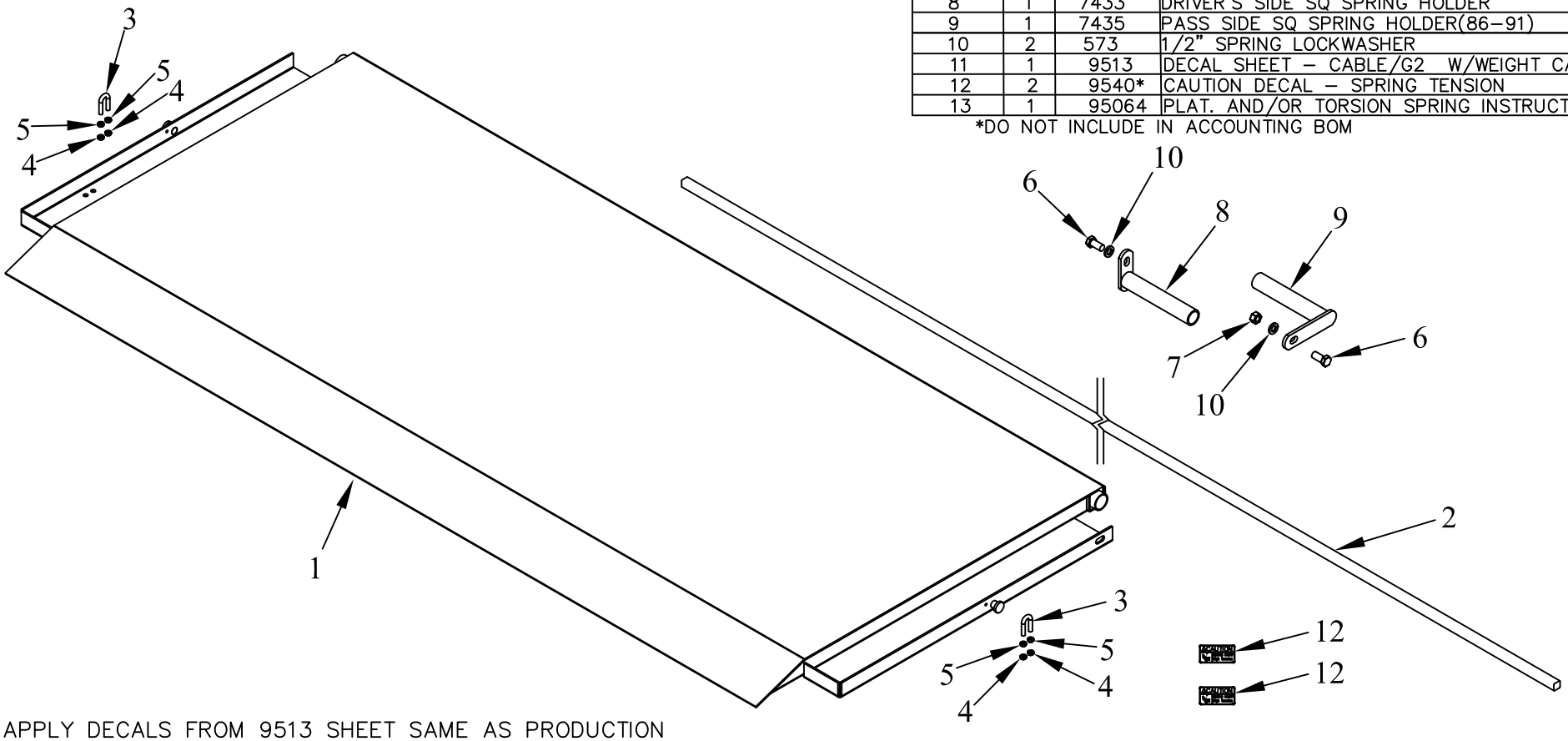


NOTES: APPLY DECALS FROM 9513 SHEET SAME AS PRODUCTION
SEND (2) 9540 LOOSE

| REV. | DATE | CHANGE RECORD | BY | APPVD | ECN |
|---|---|---|---|---|---|
| C | 1/24/17 | ADDED 9513, 9540, 95064 | AAS | | 1783 |
| B | 3/12/10 | REMOVED PN8118; ADDED PN5044, 587, 551, 7433, 7434, 573 | MTC | | 274 |
| A | 5/22/06 | UPDATED BOM | JCB | KGJ | |

THIRD ANGLE PROJECTION

| DECIMAL | 2PLC | 3PLC |
|---|---|---|
| MACHINE SAW,DRILL | .030 | .015 |
| SHEAR, PUNCH FORM | .060 | .030 |
| TORCH, WELDING ROUGH CAST | .090 | .060 |
| DRAFT 2° | ANGULAR ±1° | |

FILENAME:

SYMBOLOGY PER ANSI Y14.5

DRAWN BY. DJR

DRAWN/DATE 3/15/05

NOTES:

WOODBINE MFG. CO.
BUS BROWN DRIVE
WOODBINE, IOWA 51579

The original TOMMY GATE hydraulic lift

THE INFORMATION HERE IS CONFIDENTIAL AND MUST NOT BE USED IN ANYWAY DETRIMENTAL TO THE INTEREST OF WOODBINE MFG.

TITLE (86) 42+6" TP REPLACEMENT PLATFORM

| SCALE | FIN. WT. | PART NO. |
|---|---|---|
| N | 332 | 1789 |