ITEM NO.	QTY.	PART NO.	DESCRIPTION
1	1	8773	CLOTH CHAIN COVER (40LINK)
2	2	9076	HOG RING

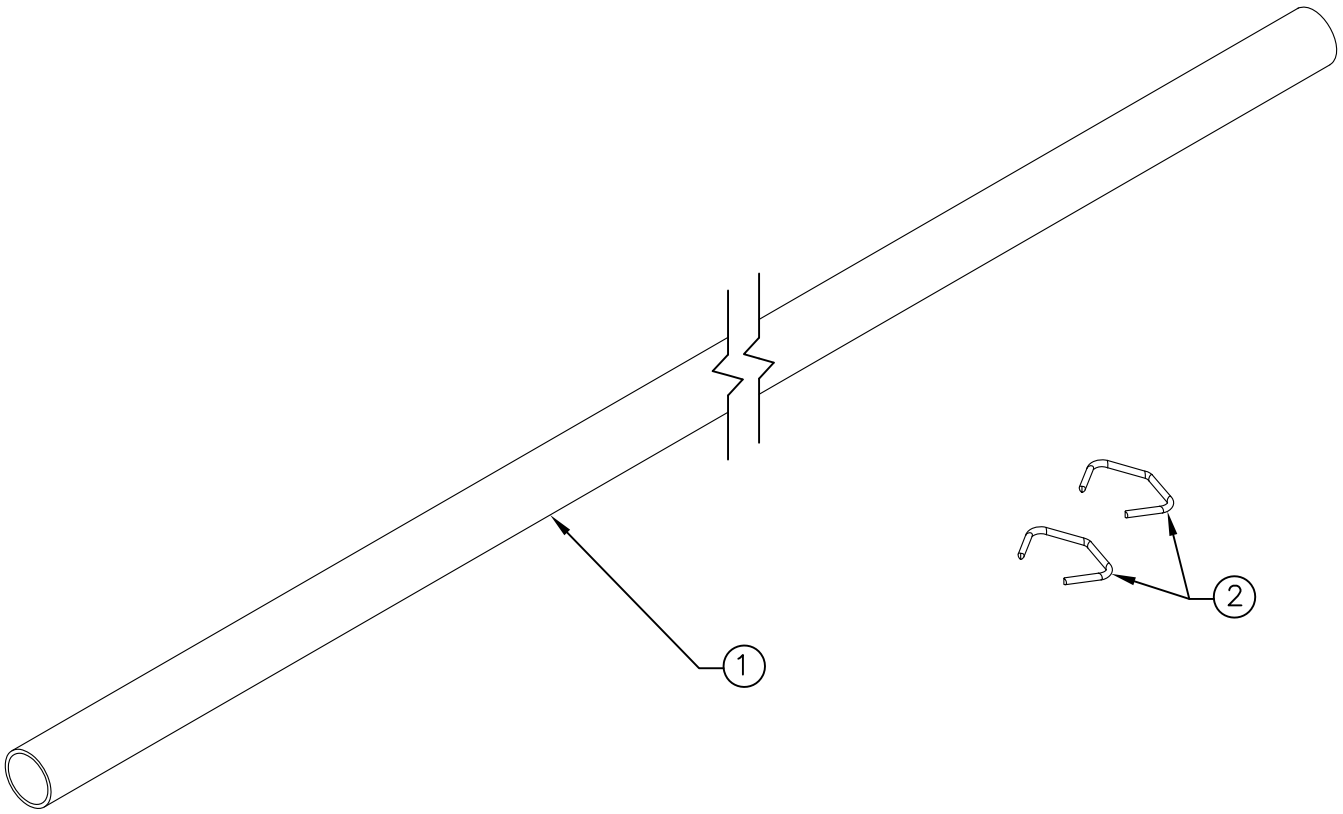

REV.	DATE	CHANGE RECORD	BY	APPVD	ECN
A	5/15/06	DRAWN IN AUTOCAD	JCB	KGJ	
B	5/9/08	REMOVED PN009077 AND ADDED PN009076	MTC	KGJ	

THIRD ANGLE PROJECTION

DECIMAL	2PLC	3PLC
MACHINE SAW,DRILL	.030	.015
SHEAR, PUNCH FORM	.060	.030
TORCH, WELDING ROUGH CAST	.090	.060

DRAFT 2° | ANGULAR ±1°

FILENAME: E:\KITS(Repair Parts)\Railgate\006597.dwg

SYMBOLOGY PER ANSI Y14.5

DRAWN BY. JCB

DRAWN/DATE 5/15/06

APPVD/DATE 5/8/08

NOTES:

WOODBINE MFG. CO.
BUS BROWN DRIVE
WOODBINE, IOWA 51579
712-647-2050
The original TOMMY GATE® hydraulic lift

THE INFORMATION HERE IS CONFIDENTIAL AND MUST NOT BE USED IN ANYWAY DETRIMENTAL TO THE INTEREST OF WOODBINE MFG.

TITLE: REPAIR CLOTH CHAIN COVER (40LINK)

SALES CATEGORY	PRODUCT LINE	SCALE	FIN. WT.	PART NO.
45	1249	1:4	0.218	6597