ITEM NO.	QTY.	PART NO.	DESCRIPTION
1	1	7872	.38"x78.50" TORSION SPRING(80EA)
2	1	587	1/2-13x1" HHCS GR5
3	1	588	1/2-13 CROWN LOCK NUT
4	1	7710	HINGE TUBE SPRING HOLDER-46EA PASS
5	1	7778	HINGE TUBE SPRING HOLDER-EA DRIVER
6	1	573	1/2" SPRING LOCKWASHER
7	1	604	1/2-13x1"USS SOC HD CAP STAINLESS
8	2	9540	WARNING DECAL - SPRING TENSION

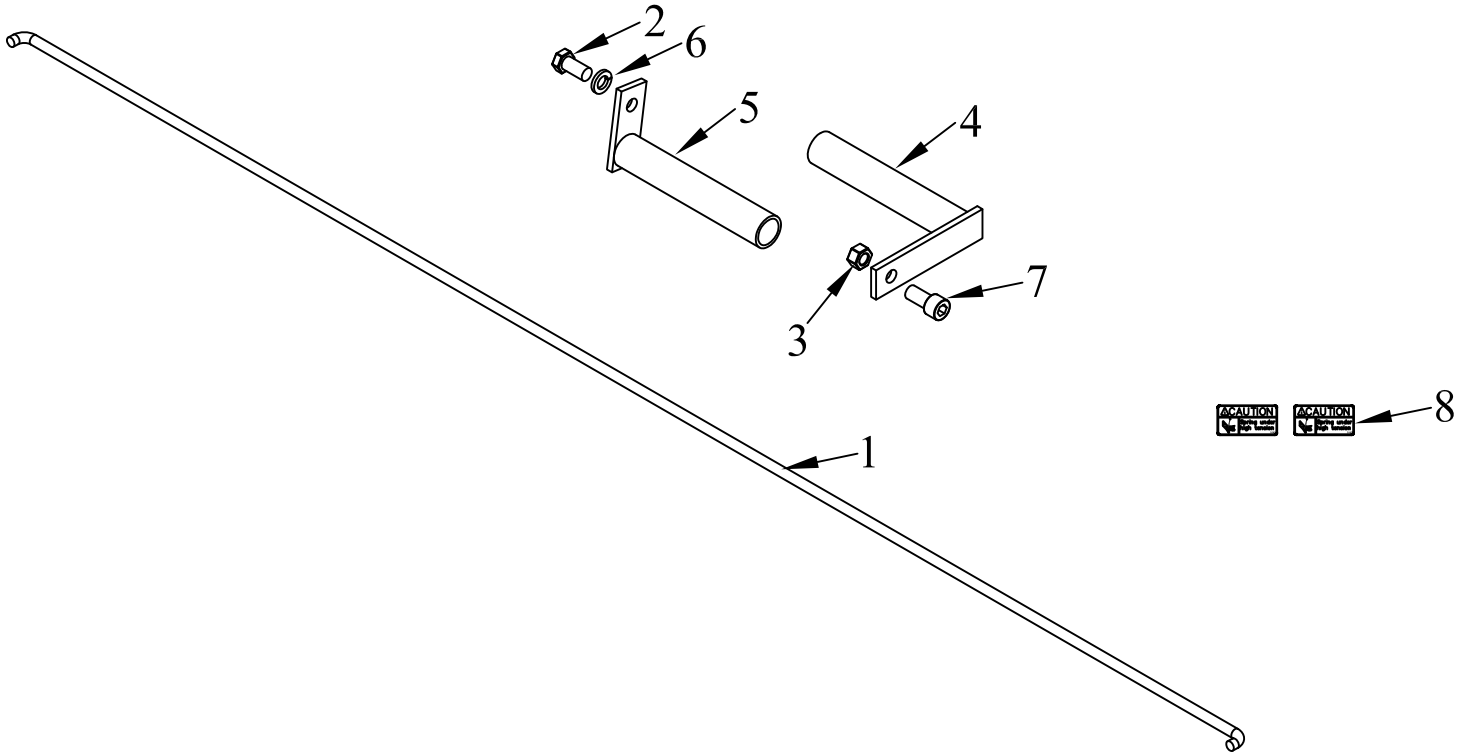

NOTE: THIS TORSION SPRING TO BE USED ONLY ON ALUMINUM PLATFORMS WITH 2 1/2" HIGH LID ENDS AND 1 7/8" THICK PLATFORM.

REV.	DATE	CHANGE RECORD	BY	APPVD	ECN
D	11/16/10	ADDED (2) 9540	JCB		376
C	12/2/09	UPDATED DESCRIPTION	JCB		242
B	8/27/08	ADDED NOTE	LSB	LSB	
A	8/8/06	UPDATED BOM	JCB	KGJ	

THIRD ANGLE PROJECTION

DECIMAL	2PLC	3PLC
MACHINE SAW,DRILL	.030	.015
SHEAR, PUNCH FORM	.060	.030
TORCH, WELDING ROUGH CAST	.090	.060

DRAFT 2° | ANGULAR ±1°

FILENAME:

SYMBOLOGY PER ANSI Y14.5

DRAWN BY. DJR

DRAWN/DATE 8/24/04

APPVD/DATE

NOTES:

WOODBINE MFG. CO.
BUS BROWN DRIVE
WOODBINE, IOWA 51579
712-647-2050
The original TOMMY GATE® hydraulic lift

THE INFORMATION HERE IS CONFIDENTIAL AND MUST NOT BE USED IN ANYWAY DETRIMENTAL TO THE INTEREST OF WOODBINE MFG.

TITLE EA TORSION SPRING KIT(80/81)

SALES CATEGORY	PRODUCT LINE	SCALE	FIN. WT.	PART NO.
		N	5.90	8029