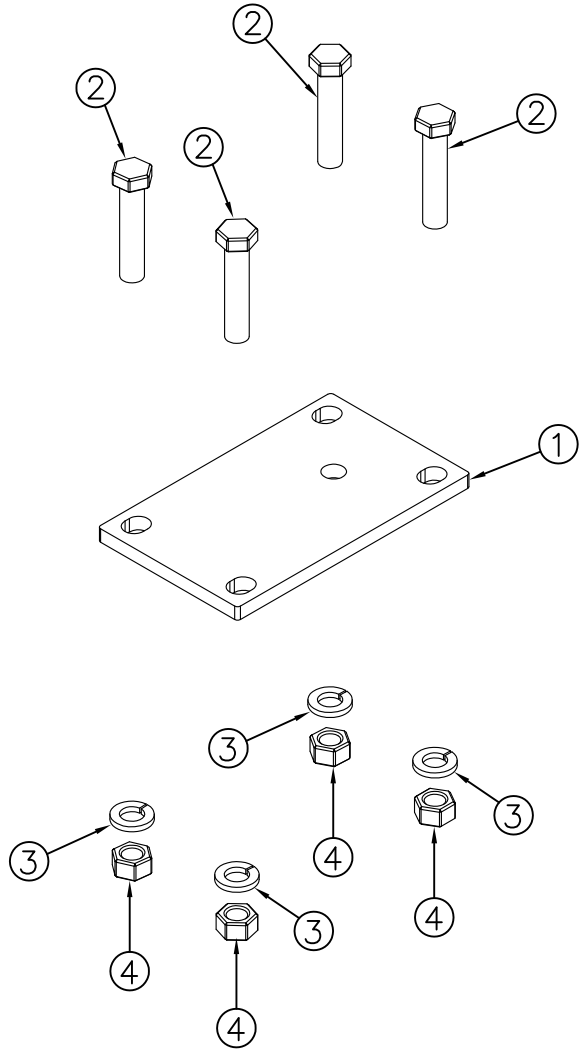

ITEM NO.	QTY.	PART NO.	DESCRIPTION
1	1	009048	STEEL OUTRAIL CAP (BH)
2	4	000589	3/8-16x1-3/4" HHCS GR5
3	4	000572	3/8" SPRING LOCK WASHER
4	4	000550	3/8-16 GR5 HEX NUT

REV.	DATE	CHANGE RECORD	BY	APPVD	ECN
A	9/17/07	DRAWN IN AUTOCAD	JCB	KGJ	

THIRD ANGLE PROJECTION

DECIMAL	2PLC	3PLC
MACHINE SAW,DRILL	.030	.015
SHEAR, PUNCH FORM	.060	.030
TORCH, WELDING ROUGH CAST	.090	.060

DRAFT 2° | ANGULAR ±1°

FILENAME:

SYMBOLOGY PER ANSI Y14.5

DRAWN BY. JCB

DRAWN/DATE 9/17/07

APPVD/DATE 10/11/07

NOTES:

WOODBINE MFG. CO.
BUS BROWN DRIVE
WOODBINE, IOWA 51579
712-647-2050
The original TOMMY GATE hydraulic lift

THE INFORMATION HERE IS CONFIDENTIAL AND MUST NOT BE USED IN ANYWAY DETRIMENTAL TO THE INTEREST OF WOODBINE MFG.

TITLE REPLACEMENT STEEL OUTRAIL CAP-BH

SALES CATEGORY	PRODUCT LINE	SCALE	FIN. WT.	PART NO.
45	8950	1:3		4197