ITEM NO.	QTY.	PART NO.	DESCRIPTION
1	1	018505	1/4" BRACE SUPPORT MOUNTING PLATE
2	1	015652	.25"x5.07"x16.64" BRACE
3	2	015651	.31"x2.99"x4.69" BRACE SUPPORT TKL
4	4	000521	1/2-13x1-1/4" HHCS GR5
5	2	000608	1/2-13x1-1/2" HHCS GR5
6	2	000576	1/2" USS FLAT WASHER
7	6	000588	1/2" CROWN LOCK NUT

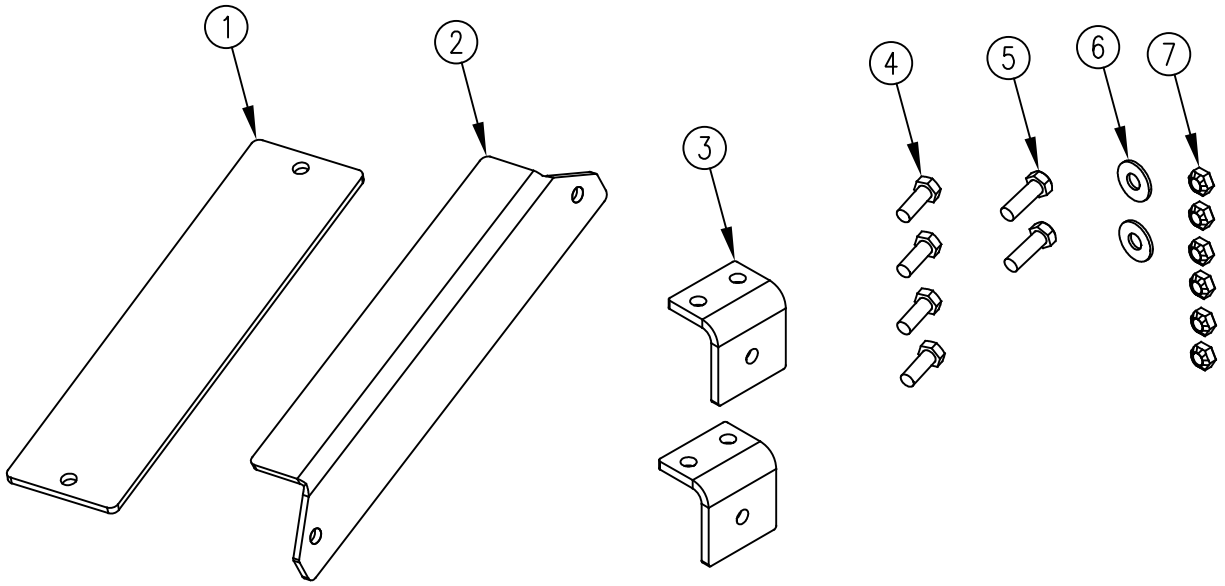

REV.	DATE	CHANGE RECORD	BY	APPVD	ECN
A	6/3/25	RELEASED TO PRODUCTION	HHW		3165

THIRD ANGLE PROJECTION

UNLESS OTHERWISE SPECIFIED

DIMENSIONS ARE IN INCHES
TOLERANCES:
FRACTIONAL ±1/16
ANGULAR MACH ±1°
BEND ±1°
TWO PLACE DECIMAL ±0.030
THREE PLACE DECIMAL ±0.010

DRAWN BY HHW

DRAWN/DATE 6/3/25

APPVD/DATE —

DO NOT SCALE DRAWING

NOTES:

WOODBINE MFG. CO.
BUS BROWN DRIVE
WOODBINE, IOWA 51579

TITLE REPL. BED EXTENSION BRACE NON ADJ. STEPS (TKL)

THE INFORMATION HERE IS CONFIDENTIAL AND MUST NOT BE USED IN ANY WAY DETRIMENTAL TO THE INTEREST OF WOODBINE MFG.

SCALE 1:6

WEIGHT —

PART NO. 18731