ITEM NO.	QTY.	PART NO.	DESCRIPTION
1	1	3291	EA PLATFORM COMPLETE (80-50) 42+6
2	1	7872	.38"x78.50" TORSION SPRING(80EA)
3	1	587	1/2-13x1" HHCS GR5
4	1	588	1/2-13 CROWN LOCK NUT
5	1	7710	HINGE TUBE SPRING HOLDER-46EA PASS
6	1	7778	HINGE TUBE SPRING HOLDER-EA DRIVER
7	1	573	1/2" SPRING LOCKWASHER
8	1	604	1/2-13x1"USS SOC HD CAP STAINLESS
9	2	8920	1.13"x1.38"IDx1.66"ODx.140" ALUM TUBING
10	2	4714	PLATFORM LATCH PIN (G2)
11	2	624	5/16" USS THRU HARD WASHER
12	2	553	3/8-16 LARGE FLANGE LOCK NUT
13	2	7637	0.5"DIAX1.079" EA PLAT CHAIN PIN (34-40)
14	4	614	1/2"EXTERNAL SNAP RING
15	2	9540*	WARNING DECAL - SPRING TENSION
16	1	9511	TOMMY GATE NAME DECAL - BLACK & GRAY
17	1	9513	DECAL SHEET-CABLE/G2 W/WEIGHT CAP. (NOT SHOWN)
18	1	95064	PLATFORM AND/OR TORSION SPRING (CABLE/G2) INSTR.

*DO NOT INCLUDE IN ACCOUNTING BOM

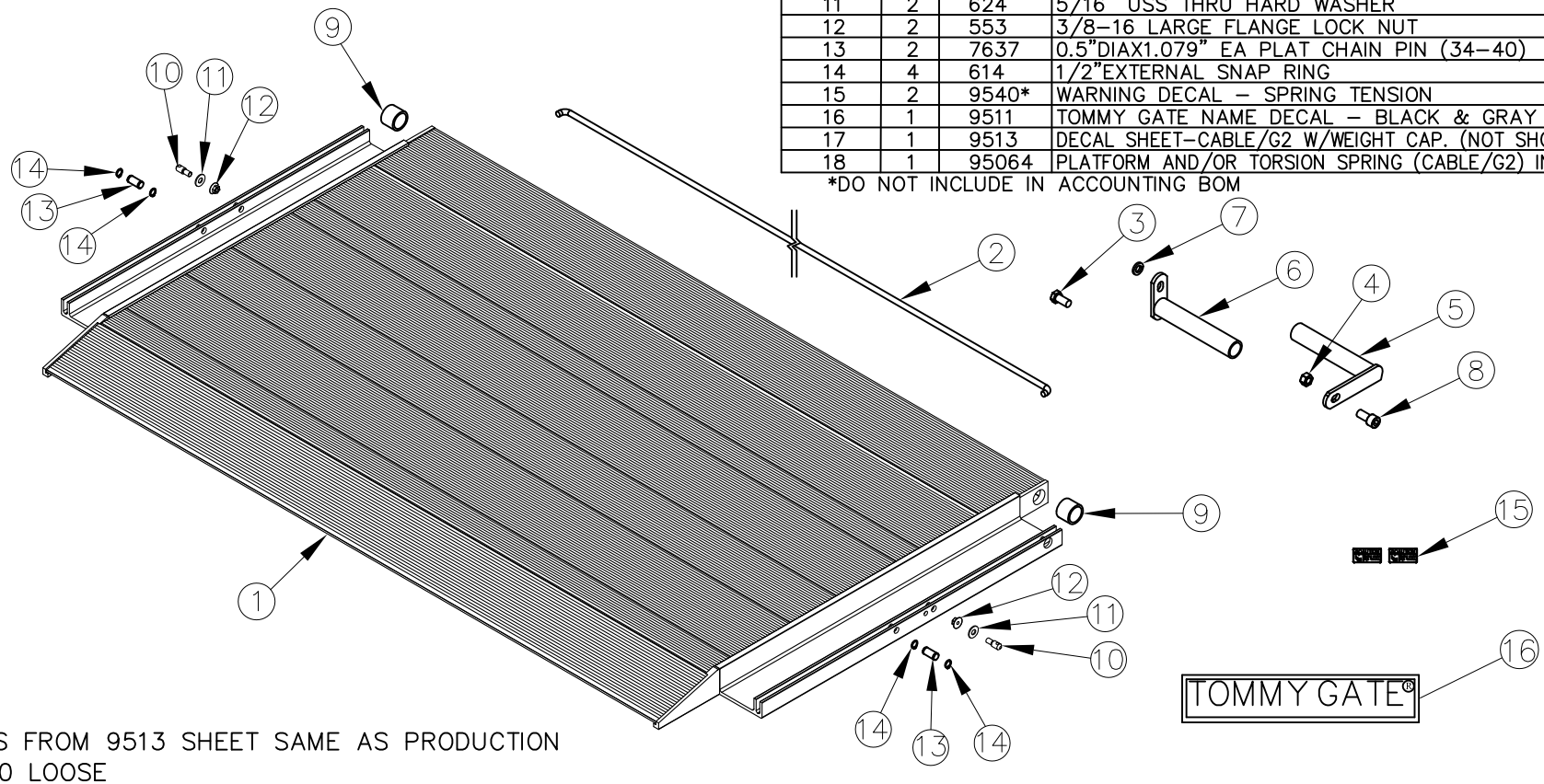

NOTES: APPLY DECALS FROM 9513 SHEET SAME AS PRODUCTION
SEND (2) 9540 LOOSE

REV.	DATE	CHANGE RECORD	BY	APPVD	ECN
E	9/30/16	ADDED (1) 9511, (1) 9513, (1) 95064	AAS		1709
D	4/5/16	8920 WAS 8919; REMOVED ACCOUNTING NOTE OF 3291 BEING LISTED INDIVIDUALLY IN EPICOR	AAS		1612
C	11/15/10	ADDED (2) 9540	JCB		367
B	5/19/10	REPLACED KITS WITH INDIVIDUAL PARTS; REPLACED (1) 8920 W/ (1) 8919	JCB		276
A	2/2/09	DRAWN IN AUTOCAD	JCB	JCB	

THIRD ANGLE PROJECTION

DECIMAL	2PLC	3PLC
MACHINE SAW,DRILL	.030	.015
SHEAR, PUNCH FORM	.060	.030
TORCH, WELDING ROUGH CAST	.090	.060
DRAFT 2°	ANGULAR ±1°	

FILENAME:

SYMBOLOGY PER ANSI Y14.5

DRAWN BY. JCB

DRAWN/DATE 2/2/09

APPVD/DATE

NOTES:

WOODBINE MFG. CO.
BUS BROWN DRIVE
WOODBINE, IOWA 51579

The original TOMMY GATE hydraulic lift

THE INFORMATION HERE IS CONFIDENTIAL AND MUST NOT BE USED IN ANYWAY DETRIMENTAL TO THE INTEREST OF WOODBINE MFG.

TITLE G2 81 41+6 EA REPLACEMENT PLATFORM

SALES CATEGORY	PRODUCT LINE	SCALE	FIN. WT.	PART NO.
		1:14	129.1	2526