ITEM NO.	QTY.	PART NO.	DESCRIPTION
1	2	012861	SNUBBER ASSEMBLY

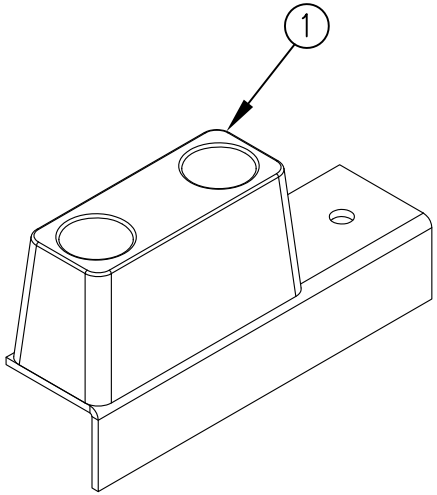

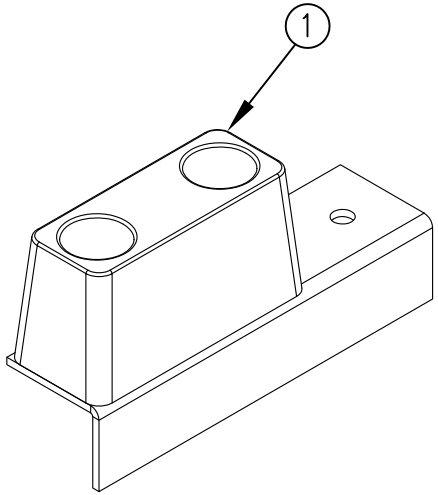

REV.	DATE	CHANGE RECORD	BY	APPVD	ECN
A	3/13/14	RELEASED TO PRODUCTION	JCB		1075

THIRD ANGLE PROJECTION

DECIMAL	2PLC	3PLC
MACHINE SAW,DRILL	.030	.015
SHEAR, PUNCH FORM	.060	.030
TORCH, WELDING ROUGH CAST	.090	.060

DRAFT 2° | ANGULAR ±1°

FILENAME:

SYMBOLOGY PER ANSI Y14.5

DRAWN BY. JCB

DRAWN/DATE 3/13/14

APPVD/DATE

SALES CATEGORY

NOTES:

WOODBINE MFG. CO.
BUS BROWN DRIVE
WOODBINE, IOWA 51579
712-647-2050
The original TOMMY GATE® hydraulic lift

THE INFORMATION HERE IS CONFIDENTIAL AND MUST NOT BE USED IN ANYWAY DETRIMENTAL TO THE INTEREST OF WOODBINE MFG.

TITLE
REPLACEMENT SNUBBER KIT (TUCKUNDER)

PRODUCT LINE | SCALE 1:4 | FIN. WT. | PART NO. 12955