| ITEM NO. | QTY. | PART NO. | DESCRIPTION |
|---|---|---|---|
| 1 | 1 | 007715 | 0.5"DIA X 1.5" SS EA PLAT LATCH PIN (34-40) |
| 2 | 2 | 000614 | 1/2"EXTERNAL SNAP RING |

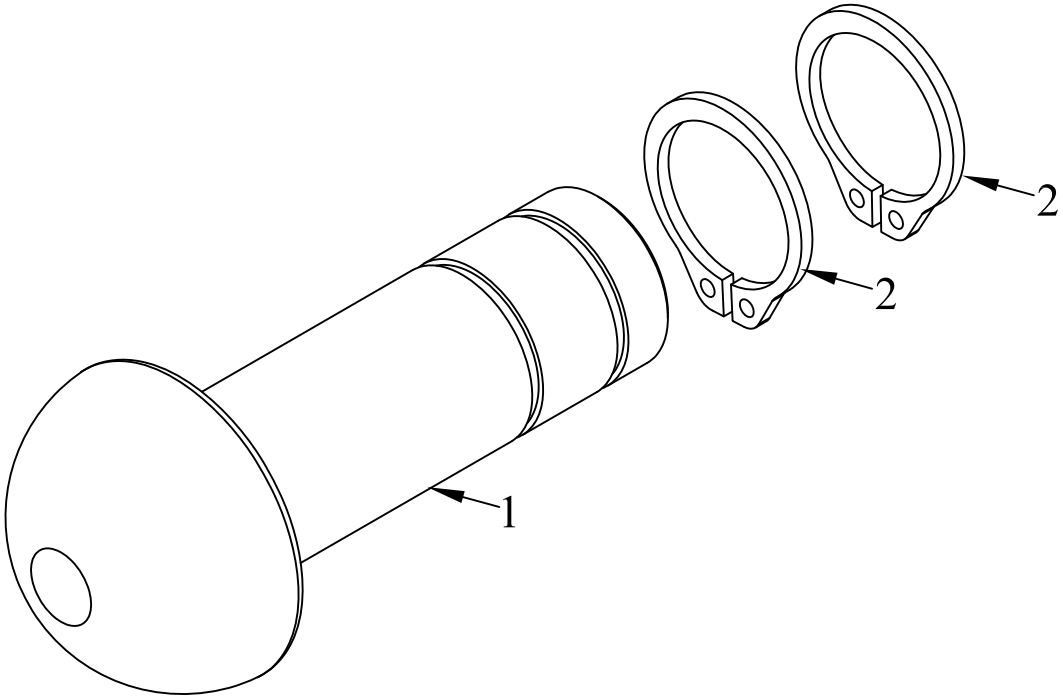


| REV. | DATE | CHANGE RECORD | BY | APPVD | ECN |
|---|---|---|---|---|---|

THIRD ANGLE PROJECTION

| DECIMAL | 2PLC | 3PLC |
|---|---|---|
| MACHINE SAW,DRILL | .030 | .015 |
| SHEAR, PUNCH FORM | .060 | .030 |
| TORCH, WELDING ROUGH CAST | .090 | .060 |

DRAFT 2° | ANGULAR ±1°

FILENAME:

SYMBOLOGY PER ANSI Y14.5

DRAWN BY. DJR

DRAWN/DATE 12/8/03

APPVD/DATE

NOTES:


WOODBINE MFG. CO.
BUS BROWN DRIVE
WOODBINE, IOWA 51579
712-647-2050
The original TOMMY GATE® hydraulic lift



THE INFORMATION HERE IS CONFIDENTIAL AND MUST NOT BE USED IN ANYWAY DETRIMENTAL TO THE INTEREST OF WOODBINE MFG.


TITLE EA REPLACEMENT LATCH RIVET(34&40)

| SALES CATEGORY | PRODUCT LINE | SCALE | FIN. WT. | PART NO. |
|---|---|---|---|---|
| 45 | 8950 | N | | 4713 |