ITEM NO.	QTY.	PART NO.	DESCRIPTION
1	1	011945	3WAY/2POS SOLENOID ASSEMBLY W/ CONNECTOR

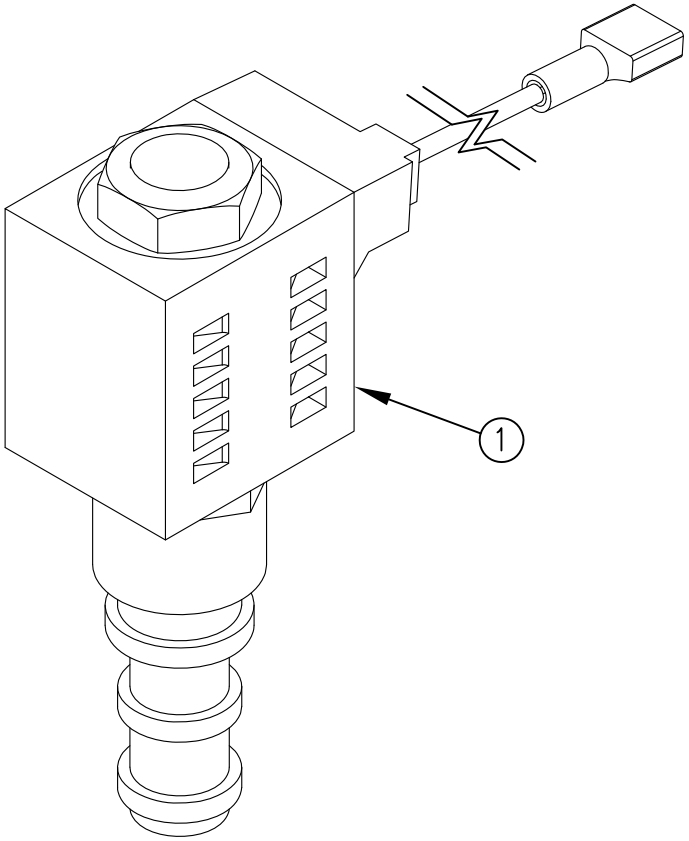

REV.	DATE	CHANGE RECORD	BY	APPVD	ECN
A	1/30/12	RELEASED TO PRODUCTION	JCB		589

THIRD ANGLE PROJECTION

DECIMAL	2PLC	3PLC
MACHINE SAW,DRILL	.030	.015
SHEAR, PUNCH FORM	.060	.030
TORCH, WELDING ROUGH CAST	.090	.060

DRAFT 2° | ANGULAR ±1°

FILENAME:

SYMBOLOGY PER ANSI Y14.5

DRAWN BY. JCB

DRAWN/DATE 1/30/12

APPVD/DATE

NOTES:

WOODBINE MFG. CO.
BUS BROWN DRIVE
WOODBINE, IOWA 51579
712-647-2050
The original TOMMY GATE® hydraulic lift

THE INFORMATION HERE IS CONFIDENTIAL AND MUST NOT BE USED IN ANYWAY DETRIMENTAL TO THE INTEREST OF WOODBINE MFG.

TITLE REPL. 3WAY/2POS SOL. ASSEM. W/CONNECTOR

SALES CATEGORY	PRODUCT LINE	SCALE	FIN. WT.	PART NO.
		1:1		11949